**SIL Global**
**Language and Culture Archives**

*Journal of Translation*
ISSN 1558-7282 (online)
https://siljot.org

# From Word to Scenario: The Influence of Linguistic Theories upon Models of Translation

Kenneth A. McElhanon

*Journal of Translation* 1 (3), 2005: 29–67.
https://doi.org/10.54395/JOT-MM6EK

**License**

©2005, SIL Global

Made available under Creative Commons Attribution-NonCommercial-ShareAlike 4.0



More resources available at:
https://sil.org/resources/language-culture-archives

# From Word to Scenario: The Influence of Linguistic Theories Upon Models of Translation

**Kenneth A. McElhanon**[1]

*Kenneth McElhanon was graduated with a B.A. from Wheaton College (IL) in 1961 with two majors: anthropology and Greek. By 1970 he had completed seven years in Papua New Guinea with SIL and was graduated with a Ph.D. in linguistics from the Australian National University. From 1971 to 1986 he served in various consultative and administrative roles in SIL/PNG. After he and his wife completed a translation project for the Selepet people (PNG) in 1986, he joined the faculty of the E. Stanley Jones School of World Mission and Evangelism at Asbury Theological Seminary (KY). Since 1991 he has taught in the TXSIL, and its successor, the GIAL.*

**Abstract**

In the late twentieth century any given model of translation was constrained by the code model of communication and by the theory of linguistics upon which it was based. Whereas the code model supplied the notion of *equivalence as the standard* by which a translation was evaluated, the linguistic theory supplied what was regarded as *the minimal unit of translation*. Accordingly, as linguistic theories were formulated to account for increasingly larger units of text, translation models were redesigned so that the notion of equivalence mirrored the size of these linguistic units. Ultimately, the notion of equivalence became so broad that attempts to achieve it were regarded as illusionary. The result was a Kuhnian revolution of sorts, with two claimants: relevance theory and cognitive linguistics. The remainder of the paper highlights how recent insights of cognitive linguistics are important in the translation praxis.

> The trouble with standards, it would seem, is that they turn out not to be eternal and unchanging after all.
>
> Lefevere and Bassnett 1995:3

## 1. Introduction

The purpose of this paper is twofold. First, it will be claimed that 20th century models of translation are grounded in structural-functional theories of linguistics and in the code model of communication (CMC).[2] As a result, all such models support a praxis aimed at transferring a message from a source language (SL) to a target language (TL) that meets prescribed conditions of equivalence. Secondly, it will be argued that the theory of cognitive linguistics as exemplified principally in the writings of Mark Johnson, George Lakoff, Ronald Langacker and Mark Turner represents a departure from prior theories of linguistics.[3] Accordingly, a model of translation based upon cognitive linguistics will bring fresh insights to the praxis of translation.[4]

Blackburn (1999) applies Thomas Kuhn's (1970) model of paradigm change to the modern history of linguistic theory, beginning with the historical-comparative tradition of the nineteenth century and

[1] An earlier draft of this paper was published in McElhanon 2002. I am grateful to Ernst Wendland for suggestions in the current revision. Any inadequacies in the paper, however, are my own responsibility. Unless noted otherwise, all citations and quotations from the Bible in English are from the New International Version.

[2] Gutt (2000), following Sperber and Wilson (1986), recognizes the role of the code model in the context of "descriptive-classificatory" approaches to linguistics.

[3] See Langacker, 1986, 1991; 1990, Lakoff and Johnson, 1980, 1999 and Lakoff, 1987

[4] I choose to refer to "models" rather than to "theories" of translation because theories of linguistics make claims regarding how human cognition generates linguistic structures and data. That translation praxis is grounded in the code model of communication and focuses on how translation is accomplished belies its status as a derivative model rather than a theory. As models they lack substantive claims regarding any principles of human cognition.

progressing through Saussurean structuralism to the present age. He demonstrates how most contemporary linguistic theories are based upon the CMC, a model that is comprised of elements from three sources. The first element is an ancient folk model of communication that Reddy (1979) associates with a *conduit metaphor*, in which ideas are sent by a speaker via a conduit to a hearer. Blackburn (1999:58) points out that whereas the conduit metaphor provides the subconscious motivation for the code model, it is Saussurean structuralism that provides the disciplinary context for the model. Accordingly, the second element is Saussure's (1972) notion of *circuit de la parole* 'speech circuit', a circulating, closed loop which transmits concept-sound composites between a speaker and a hearer (Figure A). Essentially it is a model in which the speakers communicate by means of language as a shared coding system. The third element suggested by Blackburn (1999:75) is Shannon's (1948) information theory which was formulated solely for evaluating the success of the electronic transmission of information (Figure B).

## 2. The Code Model of Communication and translation equivalence

The importance of the resulting CMC is that it requires the meaning of the message encoded by the sender to be *exactly reproduced* in the message decoded by the receiver. This reproduction was initially understood to be based upon *identity*, largely because early translation methods focused on the *word as the minimal unit of translation*.[5] Translators very early recognized, however, that claims of identity were illusionary, so they looked for a weaker claim, and they found it in the notion of *equivalence*.[6] Thus, Nida and Taber (1969:12) note, "The translator must strive for equivalence [between the source and target languages] rather than identity" and translating must reproduce "the closest natural equivalent of the source-language message, first in terms of meaning and secondly in terms of style."[7]

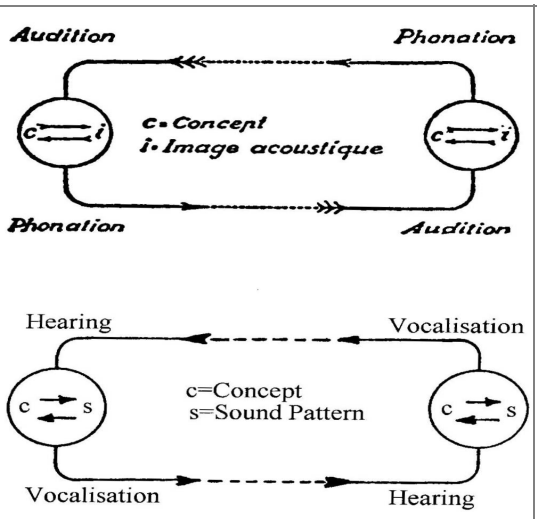


**Figure A: Saussure's Speech Circuit**

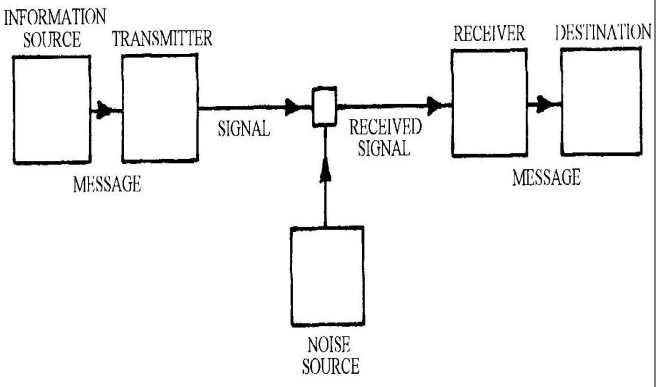


**Figure B: Shannon's Information Theory**

*From Blackburn. 1999*

[5] The insistence upon identity underlies both Quine's (1960:73-79, 1992:37-59,) and Kuhn's (1994:162-65) rejection of the possibility of translation. Quine (1969:88-90), however, admits to the translatability of "observation sentences" and Kuhn (1994:165) admits that approximate translations are possible, but not for the field of physics.

[6] In their definition of *equivalence*, Gutknecht and Rölle's (1996:294) use of "strictly speaking" in effect changes the definition to that for *identity*, "*Equivalence* can, strictly speaking, be said to exist only between factors equally present in an SL and a TL text." Once *equivalence* is merged into *identity*, it is easy to reject the notion of *equivalence* as theoretically inadequate.

[7] Newmark (1991:34) affirms what he calls Nida's (1975) "classical definition of translation as 'the reproduction of the closest natural equivalent of the source language message,'" and goes on to elaborate, "In fact, this type of translation is distinguished by its elegance and concision, its attention to a natural word order, to the deployment of clauses and phrases more frequently used than their formal equivalents in the source language, to the occasional unobtrusive distribution of the meaning of important 'untranslatable' words (e.g. 'privacy', *éclat*, *sauber*, *casanier*, etc.) over two or three target language words or a clause: a good translation is deft, neat, closely shadowing its original."

## 2.1 Equivalence in words

The problem that translators faced was first to develop a method for achieving equivalence, and then, to evaluate whether or not equivalence was achieved. It was anthropologists who supplied the analytical method, viz., componential analysis (CA), a method that "decomposed" the meaning of a lexical unit into a set of component semantic features.[8] Nida (1975:184) notes that although the traditional task of the translator was that of "finding in the target language verbal equivalences for the source language words," in reality "the translator (or exegete) of a text must deal not merely with words, but with the sets of componential features which they represent." These features are regarded as semantic "primes" and the methodology is that of "decompositional semantics."

Newmark (1988:114) notes that the process of CA in translation is "to compare a SL word with a TL word which has a similar meaning, but is not an obvious one-to-one equivalent, by demonstrating first their common and then their differing sense components. Normally the SL word has a more specific meaning than the TL word, and the translator has to add one or two TL sense components to the corresponding TL word in order to produce a closer approximation of meaning.…" Thus, for example, as the SL, the Selepet language (PNG) has eight words which may be glossed with 'carry', and when transferred to English as the TL, the meaning of each may be *augmented* with additional meaning components expressed in English by a qualifying phrase. Thus, *me* 'to carry something in one's hands', *lou* 'to carry in one's arms', *gole* 'to carry in a bag suspended from one's shoulder', *hikâ* 'to carry in a bag suspended from one's head', *soko* 'to carry piggyback', and others.

The way to evaluate success was in matching semantic feature values. Nida goes on to state (1971:185),

> Ultimately, however, the correctness of a translation must be determined not in terms of the corresponding sets of words, but on the basis of the extent to which the corresponding sets of semantic components are accurately represented in the restructuring. This is essential if the resulting form of the message in the receptor language is to represent the closest natural equivalent of the source-language text.

The combination of *decomposing* the meaning of a lexical unit into a set of semantic components and then *augmenting* the meaning with additional semantic components became an extremely important factor in the emerging praxis of translation, and we shall find that it surfaces in one form or another at all levels of meaning. In its most general form it may be stated as:

> **Equivalence factor**: **decompose** the meaning of any SL expression into the minimal components relevant to its structural level, **transfer** that meaning to the TL, and **augment** that meaning with comparable components from the TL repertoire.

After linguists had exhaustively studied the morphology and semantics of words, their interest in linguistic theory moved to the syntactic level of the sentence. Decompositional semantics, in combination with the augmentation of a core, resonates with the notion of a *deep structure augmented by transformations* as proposed in Chomsky's (1957) *Syntactic Structures*.

## 2.2 Equivalence in sentences

Gentzler (1993:44) observes that Nida's work in the field of Bible translation was initially oriented toward practice rather than theory. Furthermore, he claims, "Generative transformational grammar, along with its legitimacy within the field of linguistics, lent credence and influence to Nida's 'science' of translation." Nida (1975:71) claimed that his approach using *objects, events, abstracts* and *relations* as fundamental elements was essentially a "deep-structure" approach developed independently of Chomsky (1957). Gentzler notes, however,

> Despite claims to the contrary, Nida's theory crystallized with the addition of Chomsky's transformational component—Nida read Chomsky's Syntactic Structures in mimeograph form two

[8] *Grandfather*, for example, was said to consist of a set of features that included [+male, +two generations above ego, +same lineage]. What such analysis sought was a universal set of "semantic primes", in effect a periodic chart of semantic features that could account for the meanings in any given language of all the words for any semantic domain.

> years before it was published. With the adoption of Chomsky's theoretical premise, his transformational rules, and his terminology, Nida's theory solidified, and the result—*Towards a Science of Translating*—has become the "Bible" not just for Bible translation, but for translation theory in general (ibid.).

Gentzler also suggests that Chomsky's notion of deep vs. surface structure was influential in Germany in the work of Wolfram Wilss (1982). Gentzler (1993:63) notes regarding Wilss' approach,

> Translation for Wilss is guaranteed by the deep-structure existence of universals—syntactic and semantic, universal forms as well as a core of common experience—and *his science becomes a simple matter of creating syntactic, semantic, and reception equivalents*. Wilss' "science" is much closer to Chomsky's than even he might care to admit (emphasis added).

In the United States, Nida's model of fundamental elements was adopted by Larson (1984) and renamed to form an acronym TEAR (*things* (Nida's *objects*), *events, abstracts* and *relations*). It has most recently surfaced in Callow (1998).

The influence of Nida's model on Bible translation justifies Gentzler's characterization of it as "the 'Bible' not just for Bible translation, but for translation theory in general." Gentzler (1993:95) writes,

> Traditional translation theory was based upon premises of original meaning, training translators to interpret that meaning correctly in order to reproduce it properly, and resulted in rules and laws about the procedure whereby products could 'objectively' be compared and evaluated.(…) Richards, Nida, and Wilss are intent upon educating translators to produce unified, coherent, single reproductions of the original, or at least to reach a consensus regarding what the ideal single reproduction should be.

Nida's approach was decompositional in that he sought to produce "back-transformations"—reversals of the original SL transformations that had operated on the kernel sentences to produce more complex surface forms. The goal was to decompose the complex surface forms in order to determine the underlying kernel sentences. These kernel sentences then served as the basis for transferring the sentential meaning to the TL. He goes on to suggest,

> In all languages there are half a dozen to a dozen basic structures out of which all the more elaborate formations are constructed by means of so-called 'transformations.'" He goes on to note, "From the standpoint of the translator, however, what is even more important than the existence of kernels in all languages is the fact that languages agree far more on the level of the kernels than on the level of the more elaborate structures. This means that if one can reduce grammatical structures to the kernel level, they can be transferred more readily and with a minimum of distortion." Such back-transformations "provide not only the clearest and least ambiguous statements of the relationships but also constitute forms which correspond most closely with those expressions likely to occur in receptor languages (Nida and Taber 1969:39, 47).

This procedure is consistent with both the CMC and the *equivalence factor*: ***decompose*** the surface structure to reveal the fundamental kernels, ***transfer*** the meaning to TL kernels, and ***augment*** those kernels with comparable transformations from the TL repertoire.

From the late 1950s through the 1960s equivalence was associated with *the sentence as the minimal unit of translation*. David Crystal (1965:104-05) presents a widely accepted point of view,

> A translation is adequate when equivalence is set up between two sets of forms from different languages which are sentences. One does not equate languages word-for-word, not even phrase-for-phrase, as this produces disjointed and unnatural translation; *sentence-equivalence is the only satisfactory criterion,* and even this has to bear the possibility of removed verbal contextual implications in mind. How perfect a knowledge of two cultures and two languages would a person need to have to be able to say conclusively that two utterances mean the same thing in every way? Or, putting the problem another way, how dangerous is it to be satisfied with only partial equivalence? In the nature of things, we must be satisfied with the imperfect and there will always be valid attempts to improve the quality (emphasis added).

The sentence as the minimal unit of translation seemed very natural to a large number of linguists; it had all the appearances of constituting a discrete unit with well-defined boundaries.

### 2.3 Equivalence beyond the sentence

When linguists moved beyond analyzing sentences to ever-larger grammatical units, they searched for a new unit of translation. By the late 1960s translation equivalence was extended from the word to that of *style* (Nida and Taber, 1969:12) and *text* (Reiss 1971**).** Eighteen years later, Reiss (1989:113, 115) proposed an inclusive view of equivalence as relevant to the levels of *word*, *sentence*, *text*, *content*, *meaning*, and *effect*. Neubert (1986:89) writes of *textual* equivalence, but then later (1989:154) he distinguishes between *textual* and *pragmatic* equivalence. Baker (1992) writes of equivalence at the *word* level, *above the word* level, and of *grammatical*, *textual*, and *pragmatic* equivalence.

Larson (1984, 1998) presents one of the most systematic treatments of equivalence through the use of decompositional semantics:

- in decomposing the meanings of lexical units into semantic features,
- in reducing the meanings of surface grammatical structures to four universal classes (thing, event, attribute, relation),
- in identifying the semantic correlates underlying larger grammatical units such as paragraphs, and
- in recognizing universal discourse genre (narrative, hortatory, etc.) and features (cohesion, prominence, etc.).

This method is further extended into notions of communicative situations (speech acts, culture) and information load. It is consistent with the *equivalence factor*: at all of these levels, the translator seeks first to analyze the SL text to (1) ***determine the putative, underlying semantic universals*** for the text units in the SL, then to (2) utilize them to ***transfer*** the message to the TL, and to (3) ***augment*** them grammatically to express an *equivalent* message in the surface forms of TL text.

### 2.4 Abandoning the notion of equivalence

Very early on Newmark recognized the futility of attempting to determine unequivocally what constituted equivalence. He considered *translation equivalence* to be among the "dead ducks—either too theoretical or too arbitrary" (1981:x). Nevertheless, he still regarded the sentence, with a coherent appropriate meaning, as the usual basic unit of translation. The "area of text-linguistics, cohesion or discourse analysis, i.e. linguistic analysis beyond the sentence" was seen as having an "evident application in translation theory." Discourse analysis perhaps represented "only a marginal aspect of translation theory" as "an essential point of reference for (a) establishing the significance of all connectives including pronouns, and (b) clarifying semantically undetermined expressions" (1981:32). His perspective changed over the years and at one point he considered equivalence to pertain to a much greater extent to very high level discourse features. At this stage he writes of *cognitive* meaning: *linguistic* meaning, *referential* meaning, *implicit* meaning, and *thematic* meaning. Of these, *thematic* meaning seems to be the broadest. Thus, "Thematic meaning ensures the maximum 'reasonable' formal equivalence between source and target language text" (1981:29).

Newmark (1991) suggests two kinds of meaning, each with subvarieties: (1) his 1981 *cognitive* meaning and (2) *communicative* meaning which embraces illocutionary, performative, inferential, and prognostic meanings. When writing with regard to translation he effectively abandons the notion of equivalence,

> If I define the act of translating as transferring the meaning of a stretch or a unit of language, the whole or a part of a text, from one language to another, I am possibly putting the problem where it belongs, viz., the meaning of meaning rather than the meaning of equivalence, identity, similarity, likeness, sameness, correspondence and so on (1991:27).

Many are familiar with Nida's *dynamic equivalence* which has been interpreted by some as referring primarily to a TL reader response with an *equivalence in terms of the impact and appeal* it had with regard to the original readers. To disassociate himself from such nuancing of dynamic equivalence and to move translation towards sociosemiotic and sociolinguistic issues, he introduced *functional* equivalence: "thoroughly understanding not only the meaning of the source text but also the manner in which the

intended receptors of a text are likely to understand it in the receptor language" (de Waard and Nida 1986:9). De Waard and Nida were not alone in considering equivalence to apply in the broadest sense. Newmark (1991) also writes of *cultural*, *functional* and *descriptive* equivalence.

Gentzler (1993:144) groups a number of theories of translation that "depend upon some notion of equivalence: the same aesthetic experience, linguistic structural/dynamic equivalence, corresponding literary function, or similar formal correlation governed by social acceptability in the target culture." Although each theory represents a different approach, all are united "by a conceptual framework which assumes original presence and a re-presentation of it in the receiving society." He characterizes this dependence upon the SL text as an "epistemological strait-jacket that the power of the original text retains over the translation by reviewing the problem of translation in terms of the actual product rather than the ideal of a 'faithful' version." In other words, each theory is based upon the CMC. Table C summarizes those "decompositional-augmentative" approaches as appropriate to different levels.

| **Linguistic unit** | **Analytical method to identify the core** | **Method for augmentation in the TL.** |
|---|---|---|
| lexical units | componential analysis | add TL semantic features |
| sentence | back transformations to expose the underlying "kernel sentences" | carry out TL transformations |
| surface grammatical | rewrite text in propositions with THING, EVENT, ATTRIBUTE, RELATIONS explicit | recognize skewing and adjust the TL surface structure accordingly |
| discourse | identify the deep structure semantic roles in various discourse genre | recognize skewing and adjust the TL surface structure components |
| figurative language | change to literal meaning and recognize a point of similarity | reconstitute in TL figurative language |
| cultural forms | recognize the function and role | select a TL functional substitute |
| scenarios | Incomplete schemas | fully specify the assumptions from the cognitive environment |

**Table C: Levels of language decomposed into 'primitives' and reconstituted by augmentation**

Once linguists began to consider equivalence as pertaining only to the broadest concepts, it was just a matter of time until they seriously questioned ever achieving any kind of equivalence. Snell-Hornby's "integrated approach" to translation minimizes the concept of equivalence as relevant and justified only, with some reservations, at the simplest interlingual relationship, "the level of "*terminology* and *nomenclature*." At higher levels, such as those of *realia* and *culture-bound elements*, she writes of "*nil-equivalence*" (1995:106).

With changing notions of equivalence one also finds novel concepts of what translation entails. For Newmark (1991), translation is not simple. He writes of "social translation, cultural translation, pragmatic translation." When a source text mixes "units of meaning" or "semes," translation becomes very difficult and interesting. In such cases, he writes,

> Translation equivalence will then not be achieved word for word, collocation for collocation, clause for clause, sentence for sentence, but possibly only paragraph for paragraph, or, rarely, text for text. For this reason, translation equivalence, like the term "unit of translation," is sometimes a useful operational concept, but it can be only roughly and approximately indicated for a stretch of language, e.g. it is likely to be smaller (in the area of word, collocation, clause) for an 'expressive' text (creative literature and authoritative statements) than for an 'informative' text (e.g. technical translation, textbooks, etc.) but there will still be plenty of one to one translation in any text (1991:33-34).

Since the rise of structuralism in linguistics and its association with formal symbolic logic to account for meaning, translation theoreticians have been practicing a linguistic variety of Thomas Kuhn's "normal science", call it *normal semantics*, as they implemented the *equivalence factor*. From decompositional analyses of word-level semantics through sentential, discourse and textual semantics, translators have been drawing upon linguistic theories that emphasize discovering elemental cores of meaning which may be

augmented with semantic features of one kind or another to achieve a TL message that is equivalent with the SL message. Underlying all of these attempts is an implicit CMC.

As translation theory entered the 1990s it began to reflect the shifts in epistemology that characterize what has come to be known as post-Modernism. What has emerged is a turning away from what a text says and away from any attempt at achieving equivalence at any level, and a turning toward what a text does as its words take on an energy in their inter-textual and contextual life.

### 2.5 Beyond equivalence in meaning

More recently we have seen some innovations in the application of the CMC. Although there is variation in these innovations, what they all share is a focus on a "mental space," so to speak, that mediates between the SL and TL. Snell-Hornby recognized the interdependent relation between language and culture and redefined translation as an interaction between two cultures rather than as an activity which takes place between two languages. She proposes that "translation scholars abandon their 'scientistic' attitude and move from 'text' as a translation unit to 'culture'" (Gentzler 1993:188).

Hewson and Martin's (1991) approach, although based upon the CMC, involves two tiers, the first of which is linguistic and based upon coordinated interlinguistic paraphrases. The second tier introduces the social and cultural aspects.[9] Their focus is on the interaction of two language cultures (LCs).

> Because of the incommensurability of Language Cultures, the conversion strategy is no longer geared to the continuity of communication—this would presuppose that there is indeed a means of conversion between cultures—but to the multiplication of relationships between them. Instead of trying to define one unique medium of communication which would be detrimental to both cultures' specificities, the translator's objective is to diversify and motivate the possibilities of meaningful contacts between cultures. His or her ultimate aim is *cross-cultural multiformulation* rather than communicational adjustment. As opposed to intralinguistic meaning production, conversion procedures no longer simply contribute to the definition of meaning but to its diversification" (1991:28).

Despite disavowing a conversion strategy that is geared to the continuity of communication, they adopt the CMC. In their rendition of the model, there is a

- Source Text as a means of communication between a sender in Language Culture$_{\mathbf{1}}$ and an original receiver in LC$_{\mathbf{1}}$, using a certain family or type of discourse—as a communication medium.
- Translation Initiator—the driving force behind the act of translation.
- Translation Operator—the individual doing the translation and operating between the languages. Part of the TO's task is to analyze the position and purpose of the original, and the characteristics of the original receiver of the Source Text.
- Target Text—the aim of translation which is produced for the receiver in LC$_{\mathbf{2}}$. (1991:112ff.).

Neubert and Shreve's (1992) model includes what they call "three incarnations of the text": a source text, a target text, and a third text, which they call a *virtual translation* which is

> "a composite of the possible relations between a source text and a range of potential target texts. It is a mental model of the elements and relations which exist in the mental space between real source and not-yet-realized target.… It is a mental construct only progressively committed to paper. The virtual translation is always constrained by the source text and by the textual expectations of the reader. Even

[9] Bell (1991:19-20) presents a comparable model with "two sets of content (i.e. more than one message). It follows, then, that in our modeling of translating, we shall need two kinds of explanation: (1) a *psycholinguistic* explanation which focuses mainly on…decoding and encoding…and (2) a more *text-linguistic* or *sociolinguistic* explanation which focuses more on the participants, on the nature of the message and on the ways in which the resources of the code are drawn upon by users to create meaning-carrying signals and the fact that a sociocultural approach is required to set the process in context." See also Shaw's model in which "Transculturation is to the cultural and non-verbal aspects of communication what translation is to the verbal; both are essential for effective communication" (1988:221).

> though it is a mental construct, it is text-like. The concept of virtual translation is one that emphasizes the fact that the translator works with a mental representation. The representation is anchored by a source text and oriented in its progressive elaboration by the determinants of the translation situation. As it emerges into linguistic reality in the target culture, it is increasingly controlled by the target culture's linguistic and textual systems.… The mental representation includes the propositional content and the illocutionary force of the messages underlying the source text. It includes the pragmatic conditions surrounding the text in the source and target communities" (1992:14-15).

Their approach addresses both textual and communicative equivalence. They assert, "There is no defense for linguistic equivalence. One can make a case, however, for *textual equivalence*. Textual equivalence is not semantic equivalence between words. It is a new order of pragmatic equivalence between texts. (…) Texts can be said to be equivalent when their textual profiles are derived from situationally and functionally equivalent prototypes" (1992:142).

To illustrate this pragmatic equivalence they compare hypothetical computer manuals in Germany and America that are *situationally equivalent* and hypothetical textbooks in Madrid and Cleveland that are *equivalent in intentionality*. "The computer manuals and text books in these two situations can be said to be equivalent because they play equivalent social and communicative roles. Their prototypes are not identical in content, but they are socially equivalent.… Textual equivalence is a useful but quite general concept. It cannot function as a practical tool for the translator and translation scholar. We have to look deeper into the translation process for another kind of equivalence" (ibid.).

This other kind of equivalence is *communicative equivalence*. Imagine the following situation:

> The target reader accepts it [a translation] as a valid textual instance and is able to retrieve from it what he or she needs to know. The text yields a communicative value derived from the translator's proper connection of the source text meaning with target culture prototype. What relationship does this new text have with the original text? We can say that the new text 'stands in the place' of the original text. It is a re-textualized proxy of the source text. It conveys information to the target reader that the source text could not. Even though the textual surfaces do not match, and the semantic structure may have been modified, both of these texts yield similar information to similar readers in essentially similar situations. Isn't this a definition of communicative equivalence? (…) The source text's textuality is deliberately re-configured to produce a target textuality. There is an intrinsic source text-target text relationship in a good translation that we cannot ignore.… The issue is not whether linguistic meanings of $L_2$ items are actually equivalent to $L_1$ items. It is their textual significance as activators of knowledge which is equivalent. This last notion implies that equivalence can hold between constituent units of texts and not just between texts." (1992:143-44).

Their notion of communicative equivalence, however, is still tied to propositions within sentence structures. They go on to note,

> The micropropositional structures of a translation are created on the basis of the propositional structures of the source text. They play the same communicative roles in the new text as the parent structures played in the old.… The translator's recognition of communicative equivalence as an explicit objective is the only mechanism to explain why he or she chooses certain sentence-level renderings in the target text (144).

This trend towards focusing on communicative equivalence led to the deconstructive tendencies of post-modernism that undermined many of the epistemological foundations that had served the CMC and translation practice through the post-WWII years. Newmark (1991:10-12) writes of a continuum existing between "semantic" and "communicative" translation. Any translation can be "more, or less semantic—more, or less, communicative—even a particular section or sentence can be treated more communicatively or less semantically." Both seek an "equivalent effect." Table D presents Newmark's (1991:11-13) feature comparisons between semantic and communicative translation. Loosely speaking, whereas the semantic features reflect a modernist stance, the communicative features seem to reflect a postmodernist one.

## 3. Claimants to a disciplinary revolution within translation theory

Kuhn (1970) has demonstrated how the accumulation of anomalies contributes to a disciplinary community recognizing that their theory is no longer able to account for the data. Callow's (1998:xiii) comment that something was missing in regard to prior textbooks on meaningful translation, particularly Beekman and Callow (1974) and Larson (1984), suggests a paradigm dysfunction: "Meaningful translation needs a theory of meaning at its heart, and although translators were becoming more confident and translations more effective, theory still lagged far behind practice."

### 3.1 Relevance theory

Relevance theory (RT) was proposed by Ernst-August Gutt (1991) as a way to transcend the failures of translation theories that were based on the CMC.[10] His proposal is that prior theories of translation are mired in the issue of translation equivalence, an issue that does not address the question of inference, how much implicit material should be made explicit and how figures of speech (irony) may be handled. This is because they have not distinguished between "contextually conditioned" communication problems and "linguistically conditioned" ones (Gutt 2000:230-31).

| | **Semantic translation** | **Communicative translation** |
|---|---|---|
| 1. | Author-centered. | Reader-centered. |
| 2. | Pursues author's thought process.<br>Related to thought. | Pursues author's intention.<br>Related to speech. |
| 3. | Concerned with author as individual. | Adapts and makes the thought and cultural content of original more accessible to reader. |
| 4. | Semantic- and syntactic-oriented. Length of sentences, position and integrity of clauses, word position, etc. preserved whenever possible. | Effect-oriented. Formal features of original sacrificed more readily. |
| 5. | Faithful, more literal. | Faithful, freer. |
| 6. | Informative. | Effective. |
| 7. | Usually more awkward, more detailed, more complex, but briefer. | Easy reading, more natural, smoother, simpler, clearer, more direct, more conventional, conforming to particular register of language, but longer. |
| 8. | Personal. | Social. |
| 9. | Source language biased | Target language biased. |
| 10. | Over-translated: more concentrated and more specific than original. | Under-translated: use of 'hold-all' terminology. |
| 11. | More powerful. | Less powerful. |
| 12. | Always inferior to the original because of loss of meaning. | May be better than original because of gain in force and clarity, despite loss in semantic content. |
| 13. | Out of time and local place—'eternal'. | Ephemeral and rooted in its context, 'existential'. |
| 14. | Wide and universal. | 'Tailor-made' or targeted for one category of readership; does one job, fulfils one particular function. |
| 15. | Inaccuracy is always wrong. | A certain embroidering, a stylistic synonymy, a discreet modulation is condoned, provided the facts are straight and the reader is suitably impressed. |

[10] As relevance theory has gained acceptance within the academic community, it has become heterogeneous. The limitations of this paper, therefore, do not permit a detailed critique of the variations within the theory. I have chosen to comment on the theory as developed and applied by Ernst-August Gutt and those with a similar perspective because of their potential impact on the translation of the Bible into minority languages.

| | | |
|---|---|---|
| 16. | The translator has no right to improve or to correct. | The translator has the right to correct and improve the logic and style of the original, clarify ambiguities, jargons, normalize bizarre personal usage. |
| 17. | Mistakes in the original should (and must) be pointed out only in footnote. | The translator can correct mistakes of facts in original. |
| 18. | Target: a 'true' version, i.e. an exact statement | Target: a 'happy' version, i.e. a successful act. |
| 19. | Unit of translating: tends to be words, collocations and clauses. | Unit of translating: tends to be sentences and paragraph. |
| 20. | Applicable to all writings with original expressiveness. | Applicable to impersonal texts. |
| 21. | Basically the work of translating is an art. | Basically the work of translating is a craft. |
| 22. | Usually the work of one translator. | Sometimes the product of a translation team. |
| 23. | Conforms to the 'relativist' position of cultural relativity. | Conforms to the 'universalist' position, assuming that exact translation may be possible. |
| 24. | Meaning. | Message. |

**Table D: Features of semantic and communicative translation Newmark 1991**

Gutt claims that RT transcends the problem of equivalence by shifting the domain of the theory from 'translational behavior' to 'competence' and from the 'descriptive-classificatory' approach to that of the 'relevance theory of communication' (Sperber and Wilson 1986). The domain for RT is said to be "mental faculties rather than texts or processes of text production," and translation is to be accounted for "in terms of the communicative competence assumed to be part of our minds." Moreover, the "host of different factors noted as important in recent years are [not] ignored: they are naturally covered.…as part of our mental life; no external factor has an influence on either the production or interpretation of a translation unless it has entered the mental life of either the translator or his audience" (Gutt 2000:21). In saying that RT addresses the "host of different factors" of previous theories as well as introducing more recent theoretical developments, Gutt lays the foundation for claiming that RT represents a true paradigm shift in the sense proposed by Kuhn (1970). Negative reactions to Gutt (1992) lead him to propose that "the paradigm shift suggested here goes far deeper than matters of translation and affects some fundamental but often subconscious beliefs about language and communication. Without a revision of those beliefs it is difficult to understand and appreciate the account of translation presented here" (2000:204).

Gutt's observations of the necessity for including both "contextually conditioned" and "linguistically conditioned" matters were foreshadowed by Schank and Abelson's (1977) *conceptual dependency theory*, a theory of the representation of the meaning of sentences. They recognize that "the reader brings a large repertoire of knowledge structures to the understanding task" so that "the process of understanding a passage consists in finding a schema which will account for it." Such knowledge serves as the source for implicit information and inferential reasoning. They note that "there has been increasing recognition that context is of overwhelming importance in the interpretation of text. Implicit real-world knowledge is very often applied by the understander, and this knowledge can be very highly structured. *The appropriate ingredients for extracting the meaning of a sentence, therefore, are often nowhere to be found within the sentence*" (1977:9, emphasis added).

Not surprisingly, RT, as developed by Sperber and Wilson (1986) and applied to translation by Blakemore (1992) and Gutt (1991, 1992, 2000), bears a strong resemblance to Schank and Abelson's *conceptual dependency theory*. To account for implicit and inferential knowledge, RT draws upon two notions. The first is the familiar distinction between *sentence meaning* and *utterance meaning* (Blakemore 1992), combined with *contextual effects*—the technical notion by which RT captures the link-up between an utterance and its context. In RT, *context* is understood as more than the immediate text in which a linguistic unit is embedded. It is extended to include the total knowledge and conceptual framework that enables one to interpret experience. Sperber and Wilson (1986:15-16) identify it as "very rich". It includes "expectations about the future, scientific hypotheses or religious beliefs, anecdotal memories, general

cultural assumptions, beliefs about the mental state of the speaker.…" (cited by Gutt 1992:22). Furthermore, an utterance must have *contextual effects* in order to be perceived as relevant. The more contextual effects an utterance achieves with an audience, the more relevant it will be to that audience (Gutt 1992:21, 24). As we shall see, these are important claims, because they provide the basis for the development of a hermeneutic that lacks adequate constraints.

The second notion is a model of "ostensive-inferential communication" which allows one to use inferential processes to retrieve information from memory and access much of what is generally included in background knowledge (Gutt 1992:14). These two notions account for the kinds of information that the CMC is reputed to fail to handle. Gutt does not deny a role for the CMC, but claims that "there are serious problems with the view that communication *consists in* the encoding and decoding of messages. The main reason for these reservations is that there are many aspects of human communication for which the code model simply cannot account" (1992:11). He faults *coding* as fulfilling "neither a necessary nor a sufficient condition for human communication to take place: It is not *necessary* because a lot of human communication happens without coding or, as we just saw, even overrides the code; it is not *sufficient* because inference needs to take place as well" (1992:14). Gutt regards this observation as important for translation because "the most explicit accounts of translation that we have had so far rely on the code model of communication—either explicitly or implicitly. *To the degree that the code model is inadequate, we can also expect code-model-based views of translation to be inadequate*" (1992:14-15, emphasis added).

Another claim made by Gutt is that RT "provides a *much sharper tool for meaning analysis, or exegesis*, than the code model. Consequently it can lead to a much deeper understanding of the meaning of the original text" (1992:15). The inference one may draw here is that RT constitutes an advance over earlier exegetical tools. In the context of RT being characterized by its power to account for nonliteral language, Gutt addresses such topics as metaphors, poetic effects, irony, and structural rhetorical devices. His observation is that standard hermeneutic principles neglect the importance of contextual information, particularly the cognitive context. We shall consider these questions in order.

First, "Does RT represent an autonomous theory of translation wholly divorced from the CMC?" Although neither Sperber and Wilson (1986) nor Gutt (1991) claim a total freedom from RT being influenced by the CMC, Gutt does claim that RT represents a deep paradigm shift and that it is not susceptible to the kinds of difficulties associated with the CMC. In particular, "The inferential approach of relevance theory allows us to penetrate to a deeper and more precise level of understanding texts than the code model does" (1992:20).

Gutt (1992:12-13) writes regarding the utterances (a) *have had breakfast* and (b) *have been to Tibet* that "while it would be appropriate to use [b] the second utterance even if your visit to Tibet was as far back as ten years, it would be felt to be inappropriate to use [a] the first utterance if the last breakfast you had was two or three days back. Again, there is no clue in the linguistically coded form that would indicate that different time scales are being thought about," that the necessary information is "supplied extralinguistically, from what we know about having meals and about traveling. As Sperber and Wilson [1986] point out, the semantic representations of sentences provide only *incomplete schemas that need to be developed further into fully specified assumptions with the help of contextual information*."

Sperber and Wilson's conceptualization of RT is paralleled by Snell-Hornby's "integrated approach" in which she too extends the relevant context so that "the non-linguistic disciplines—or areas of so-called 'extra-linguistic reality'—…are inseparably bound up with translation" (1988:33). Any augmentation of a SL message to meet the needs of a TL audience, by adding 'contextual features' by any method, whether RT or the integrated approach, constitutes an implicit admission that there is an underlying CMC. Moreover, I suggest that the greater the number of specified contextual effects, the greater the dependency upon the CMC.

Although Gutt attempts to distance RT from the CMC, when we observe how those who purport to follow RT actually produce a translation, we find evidence that the translations are grounded in the CMC. In responding to requests regarding the relevance of RT to translation praxis, Gutt addresses the "subtle complexity of the translator's task" and suggests that "competent translation necessarily involves the following components." (2000:232-33).

The translator needs the following skills and knowledge:

- sufficient mastery of the original language,
- thorough familiarity with the contextual background knowledge assumed by the original communicator for the text in question, and
- what contextual effects were intended in the original context.

On the basis of these skills the translator uses the following methodology:

- for each SL utterance, construct a TL utterance from properties of the target language that "will lead to an interpretation that resembles the original interpretation closely enough to make it consistent with the principle of relevance for the target audience."
- the translator produces a TL expression that s/he "imagines processing in the originally intended context and compares the resulting interpretation to that of the original. If satisfied with the resemblance achieved, s/he will accept the TL expression; otherwise s/he will attempt to improve resemblance by changing the properties of the target expression…."

Gutt claims, "it should be clear that the focus of relevance-theory based translation is on the comparison of interpretations, not on the reproduction of words, linguistic constructions, or textual features" (2000:233). But, is it all that clear? Although he makes that claim for the theory, the methodology appears to differ little from those of prior approaches based upon the CMC.

The grounding of RT in a theory of communication, even one purportedly cognitive and mental in orientation, ensures that it is subject to many of the alleged infelicities of the CMC. Moreover, it encourages RT practitioners to develop a methodology that is consistent with the notion of translational equivalence. Although the "components" involved in the act of translation may have different names, they embrace the same phenomena. To be perceived as relevant, an utterance must have *contextual effects*. Gutt notes, "The more contextual effects an utterance achieves with an audience, the more relevant it will be to that audience" (Gutt 1992:21). This focus on communicative relevance as based upon the quantity of contextual effects, elaborated upon in terms of the SL components in the utterance that are transferred to the TL utterance, draws RT back into the domain of decompositional semantics. Moreover, the question becomes, "How many contextual effects are necessary to reach optimal relevancy? We will address this shortly in relation to Gutt's elaboration of the contextual effects for John 13.

We have noted that Gutt suggests that the domain for RT is said to be "mental faculties rather than texts or processes of text production," and that translation is to be accounted for "in terms of the communicative competence assumed to be part of our minds" (2000:21). Thus the contextual effects, that "host of different factors" that are covered as "part of our mental life" are no longer to be regarded as part of the text, but as part of the "mental life", i.e., the cognitive background available to the TL audience. This raises the issue of how the audience is to be made aware of these contextual effects.

Gutt suggests that meeting the need to elaborate the contextual effects rests upon both the translator and the TL audience. He writes, "translation is confronted not only with one barrier—the all too familiar *language barrier*—but also with the distinct second barrier of *contextual difference*." He goes on to note,

> The primary responsibility of the translator is to master the first barrier. Concerning the second barrier, it seems that the lower the degree of resemblance [between the SL and TL texts] required, the freer the translator is to adapt to the actual context of the target audience. On the other hand, the higher the degree of intended resemblance gets and the greater the claim of authenticity, the more responsibility falls on the audience to familiarize themselves with the original context.[11] One of the consequences of this realization is that the deployment of translation may require *additional* measures which lie outside of but are *complementary to the translation effort* itself and which are designed to adjust the target audience's context as necessary. In simple cases, the translator may consider providing this complementary material him/herself. Where the contextual differences are great,

[11] Authenticity relates to the attitude of the TL audience toward the SL text. A greater claim of authenticity entails a greater resemblance of the TL text to the SL text.

> requiring the provision of extensive information about the socio-cultural and historical setting in which the original was written, this task may go far beyond the translator's resources. It may require the development of *additional channels of communication accompanying the translation*" (2000:231, final emphasis added).

Under the concept that the TL text must preserve something from the SL text that enables the TL audience to recognize that the TL text is a translation rather than an original composition, a number of RT practitioners have argued against the practice of including material implicit to the SL text in the TL text. The problem for RT translators, however, is that having removed such contextual effects from the text, they are confronted with finding those "additional channels of communication" for making them available to the TL audience. What is important is that the recognition of these contextual effects is dependent upon a comparison, in some cases of formal differences in cultural forms and practices between the SL and TL, but in other cases in the chimerical imaginations of the translator as he processes the TL expression as though he were in the original SL context and had the ability to compare his interpretation with a putative original. Such comparisons for the purpose of recognizing contextual effects belie an implicit underlying CMC.

In practice, many RT translators have chosen to reintroduce the contextual effects in footnotes. In effect the footnotes become a kind of catechism or study Bible. In most cases, the footnotes typically add (1) implicit SL information so that the TL readers *can access the SL message* or (2) TL contextual information to *smooth the transference of the SL message.* Removing the contextual effects from the text and placing them in footnotes does not enable RT translators to free the translation from the influence of the CMC. Rather, a copious use of footnotes is a clear indication that the CMC is implicit in the application of RT. The greater the use of footnotes, the stronger the implication that the CMC underlies the translation.

The answer to our first question, therefore, is that RT does not represent an autonomous theory of translation wholly independent of the CMC. Gutt's (1992:15) comment regarding translation theories based upon the code model is relevant, "To the degree that the code model is inadequate, we can also expect code-model-based views of translation to be inadequate."

Secondly, "Does RT constitute a truly innovative advance in exegesis and hermeneutics or does it constitute an extension of current exegetical and hermeneutic principles?" For an answer we may consider Gutt's interpretation of John's account of the Last Supper (John 13) in light of "poetic effects"—the immense richness of language—and then compare it with that of D. A. Carson (1991). Gutt writes,

> To allay the fears of those who are worried that relevance theory might not be applicable to literature, let us look at a passage in John's Gospel. I am thinking of the passage where John reports how Judas left from the Last Supper to betray Jesus. The passage ends with the words 'As soon as Judas had taken the bread he went out. And it was night' (John 13:30, NIV) (1992:52).

His suggestion is that 'And it was night', "in Greek only three short words, ἦν δὲ νύξ, communicates much more than the time of day. It is a very rich final chord at the end of this dramatic section." After a lengthy and imaginative discourse, Gutt concludes, "Three little words, an immensely rich interpretation. How does it come about? By including these words, John promised his readers adequate contextual effects. However, he refrained from giving them particular guidance as to what these effects might be, inviting them to explore and exploit the richness of the cognitive environment he shared with them" (1992:52). In support of his interpretation he provides a comparison of encyclopedic information relating both to night and dark. He goes on to note, "I think I spent more than half an hour pondering those three words and did not exhaust their interpretation but kept discovering new, exciting insights, in other words, contextual effects. 'Oh the depth of the riches of the wisdom and knowledge of God!' (Rom. 11:33)" (1992:53-54).

Carson's (1991:476) note on *And it was night* reads, "Doubtless this is historical reminiscence, but it is also profound theology. Even though 'the paschal moon was shining at the full', Judas was swallowed up by the most awful darkness, indeed by outer darkness (Mt. 8:12; 22:13; 25:30). Judas was heading to his own place (cf. 1:5; 3:19–21; Acts 1:25). But in another way it was also the night time for Jesus: it was the hour of the power of darkness (Lk. 22:53)."

Carson interprets *And it was night* as "profound theology" in spite of the fact that John records that when the disciples met together with Jesus "The evening meal was being served" and "the devil had already

prompted Judas Iscariot, son of Simon, to betray Jesus." Moreover, the event following the final meal is the night time betrayal of Judas leading the scribes and Pharisees to the garden to arrest Jesus. John may have balanced his notation at the beginning of the account that "the evening meal was being served" and "the devil had already prompted Judas" (13:2) with the subsequent notation near the end of the account that "As soon as Judas took the bread, Satan entered into him" (13:27), "he went out. And it was night" (13.30). We may reasonably question a hermeneutic that suggests that some deeper, profound theological meaning lies beneath the simple and literal meaning of a text.

The insights we have regarding conceptual metaphors place constraints on such an open-ended hermeneutic. For one thing, the inferential associations suggested by Gutt and Carson as pertaining between νύξ 'night' and σκότος 'darkness' cannot be supported within scripture.[12] Νύξ 'night' does not function within broader conceptual metaphors; its figurative use is that of metonymy. It stands for 'the time during which people do not work' (John 9:4, "As long as it is day, we must do the work of him who sent me. Night is coming, when no one can work.") and for 'night time' (1 Thess. 5:5, "You are all sons of the light and sons of the day. We do not belong to the night or to the darkness." The chiastic structure here pairs light with darkness and day with night. Moreover, the rich metaphorical use of σκότος 'darkness' can be readily distinguished from the paucity of any metaphorical use of νύξ 'night'. Note Rom. 13:11b-13a, "The hour has come for you to wake up from your slumber, because our salvation is nearer now than when we first believed. The night is nearly over, the day is almost here. So let us put aside the deeds of darkness and put on the armor of light. Let us behave decently…." In this passage the call for people to wake from their slumber is consistent with understanding *night* and *day* as metonyms for night time and day time. "Deeds of darkness" and "armor of light", on the other hand, can be shown to be structured by broader conceptual metaphors. Note the following passages:

- Rom. 1:21 "their thinking became futile and their foolish hearts were darkened."
- Eph. 4:18 "They are darkened in their understanding…because of the ignorance that is in them due to the hardening of their hearts."
- John 1:4-5 "In him was life, and that life was the light of men. The light shines in the darkness, but the darkness has not understood it."
- 1 John 1:6 "If we claim to have fellowship with him yet walk in the darkness, we lie and do not live by the truth."

A cursory inspection of biblical data suggests a rich interplay of metonymies and conceptual metaphors, much greater than what can be analyzed here. Metonymies include LIGHT STANDS FOR KNOWLEDGE, DARKNESS STANDS FOR IGNORANCE and these are associated with the conceptual metaphor LIVING OUT THE TRUTH IS WALKING IN THE LIGHT (see the later discussion of the conceptual metaphor TRUTH IS A ROAD).

Gutt claims that the inferential approach of RT "allows us to penetrate to a deeper and more precise level of understanding texts than the code model does" (1991:20). It is, however, an inappropriate hermeneutical practice for contemporary interpreters to impose their Western inferential patterns upon the biblical texts. The result is a skewing of the meaning, not a discovery of a deeper meaning. A responsible hermeneutic requires, rather, that the biblical passages be studied, in this case to discover which conceptual metaphors structure how the biblical authors wrote and in which ways they only partially structure their knowledge. When these limitations are known, interpreters will have guidelines to help them restrain such open-ended elaborations of the message. What RT, as a "much sharper tool for exegesis," as one that "allows us to penetrate to a deeper and more precise level of understanding," shares with Carson's approach is the

[12] All modes of interpretation ought to be supported by the data of scripture. Some interpreters may suggest the concept of "priming", in which the sense of one word primes, i.e., evokes, the sense of another word that is deemed by the interpreter to be related. Thus, an interpreter may claim that νύξ 'night' primes σκότος 'darkness' and then such priming allows access to the concepts associated with σκότος such as φαῦλος 'evil', ἀνομίᾳ 'lawlessness', and πονηρία .'wickedness'. It is easy for an interpreter to make such associations unconsciously on the basis of his or her own language, but to assert such putative associations for speakers of first-century Greek is nothing more than a chimera.

common hermeneutic that treats metaphors as polyvalent, i.e., subject to multiple interpretations. Metaphors may be said to be polyvalent only when they are taken out of context for the purposes of academic discussion and interpretation. Then, as a diversity of new contexts is suggested for them, they are given multiple interpretations. In the context of natural language, however, metaphors rarely allow for more than one interpretation.

A question that demands a serious response relates to how these inferences are used by those who draw them. How certain can the translator be that he has not made explicit for the TL audience more than the optimum number of contextual features? Would a TL text ever require the kind of richness discovered by Gutt for "And it was night"? If not, then is the primary value of RT to be found outside of translation, perhaps in how it may inspire one to plumb the depths of meaning purported to be in a text and make personal applications? As such it could be a tool for personal study.

### 3.2 Cognitive semantics

Blackburn noted a number of revolutionary approaches to grammar, among them that of Langacker and Lakoff. We have noted that Callow (1998:xiii) writes, "Meaningful translation needs a theory of meaning at its heart.…" Although one may rightfully regard *cognitive semantics* as representing a theory of meaning, in reality it is more than that. It is, in the first instance, a theory of human cognition, of how human cognition is very much integrated with the nature of our bodies and in how we interact with the world as we experience it.[13] The significance of this fact is that its focus on human conceptual processes and knowledge structures does not negate the usefulness of other theories of linguistics, particularly those theories which are heuristic tools with a bottom-up approach to discovering syntactic structures (e.g., tagmemics). Nevertheless, the discoveries within cognitive semantics are especially relevant to the formulation of principles of hermeneutics-translation and have implications for how translators may ply their trade.[14]

It is necessary first to introduce some of the significant discoveries made within the discipline of cognitive semantics and then consider the implications these have for the practice of translation. For our purposes I will introduce three concepts: the *basic level* vs. abstract, superordinate levels, the concepts of *prototypes* and *idealized cognitive models*, and that of *conceptual metaphors*.

#### 3.2.1. The basic level in relation to prototypes and idealized cognitive models (ICMs)

**Basic level** refers to a particular level in a taxonomy. The taxonomy familiar to most of us is the *genus-species* model used by biologists to classify life forms. We subcategorize *animals* as including *birds, dogs*, *cats*, *horses*, *cows*, *sheep*, etc.[15] Each of these may be further subcategorized. For example, we subcategorize *birds* as to whether they are *pigeons*, *hawks*, *geese*, *ducks*, etc., *dogs* as to whether they are *poodles*, *terriers*, *spaniels*, *hounds*, etc. and *cats* as to whether they are *Siamese, Burmese, Manx,* etc. This kind of categorization results in a *taxonomy* consisting of a number of levels in which a category at a lower level is included in the category expressed at the level immediately above it. Thus a *terrier* is a 'kind' of *dog*, and a *dog* is a 'kind' of *animal*.

What is significant about a taxonomy is that there is one level which is more cognitively basic than the others. This "basic level" is the most abstract level at which humans can form mental images (Rosch, et al. 1976, Rosch 1978).[16] For example, we can form a mental image of basic-level categories such as those of a

---

[13] *Cognitive semantics* is but one branch of the broader discipline of *cognitive science*. Lakoff (1987) calls the underlying philosophy of his approach "experiential realism," but twelve years later he and Mark Johnson (1999) call it "embodied realism."

[14] I distinguish *hermeneutics* from *translation* by restricting the former to the interpretation of meaning within a single language, and the latter to the interpretation of meaning expressed in one language by means of another language. Hermeneutics, as commonly practiced by theologians, is equivalent to translation, since the theologians speak contemporary languages and interpret the meanings expressed in classical languages

[15] I am not strictly following the Linnaean classification in this discussion. The fact that there are a number of levels separating that represented by *animal* and the kinds of animals listed does not skew the points to be made.

[16] Rosch et. al. (1976) list a number of other characteristics for the basic level. Although the basic level has been associated with the Linnaean level of genus (Lakoff 1987:35), it does shift to other levels for people who live in different environments or who have expert knowledge (Tanaka and Taylor 1991).

*dog*, a *screwdriver* and a *chair*, but not of their abstract, superordinate-level categories of *animal*, *tool* and *furniture*. When asked to picture an *animal* in their mind, respondents typically cite a basic-level representative of that abstract category such as *dog*, *cat*, *horse*, etc. This is because it is impossible to form a mental image of a superordinate-level category. Overlapping the images of the various basic-level categories such as those of a *tiger*, *giraffe*, *cow*, *elephant*, *pig*, *buffalo*, *sheep*, *gorilla*, *human*, *rhinoceros*, *monkey*, *squirrel* and *mouse* does not produce any kind of reasonable image for the superordinate-level category *animal*.

Furthermore, the basic level is fundamental to how we interact with animals. We interact differently with dogs than we do with cats, and each responds differently. Dogs show affection by licking and wagging their tails. Cats, in comparison, are largely unresponsive.

We also interact with basic-level artifacts in different but uniform ways. Sitting on a chair is basically the same whether it is a soft-cushioned or wooden, elevated at a tavern bar or swiveling in a hair salon. Reclining on a bed is basically the same for all beds, whether on a coil spring mattress, a water bladder, a crib, a cot, a stretcher or a hammock. There is, however, no uniform way to interact with the more abstract, superordinate concept of *furniture*.

A **prototype** may be thought of as a conceptual abstraction which underlies a given category of objects for which we can form mental images. Picture in your mind a kind of bird. What bird comes to mind? Americans who live in the northern regions typically picture a robin, perhaps because it is one of the most common birds and one of the first to arrive with spring. In Texas, where robins only pass through on their migrations, it is the cardinal or the blue jay that achieves the highest ranking. Few people in either region picture a chicken or a penguin. The fact is that robins are very good representatives of a bird, but chickens and penguins are not. We may array the various representatives of birds along imaginary axes of a circle with the best representatives located near the center represented by the prototype and the worst representatives near the margins. Between the robin near the center and the penguin near the edge are sparrows, crows, starlings, pigeons, pheasants, ducks, geese, turkeys, pelicans, and a wide variety of other feathered creatures. The range of creatures that belong to the category bird may be ranked according to how well they conform to the prototype, our abstract concept of birdness. Such a gradation of membership constitutes a **prototype effect**.

Furthermore, if we were to superimpose the images of many different birds so that there would be as much overlap as possible, the result would be an indistinct, blurred image. Such a hypothetical image is analogous to the prototype which serves as a conceptual abstraction of "birdness," i.e., what it takes for something to qualify as a bird.

The cognitive principle which motivates the formation of prototypes is that of *cognitive economy*. It states that it is advantageous for us to be able to reduce the seemingly infinite range of sensory perceptions to a manageable amount while at the same time maintaining a sufficient number of those features so as to reproduce the original range. Rather than having to maintain in our minds an active "file" containing all the images of possible birds, we maintain a single prototype. Such a prototype, in this case that of birdness, is underspecified in terms of the actual features exhibited by the diversity of birds representing the category.[17] It is immediately accessed holistically as a gestalt and serves as a template by which we evaluate how well a given bird fits into the category.[18] It is cognitively powerful in that it may account for hundreds of representatives within a single category.

An **idealized cognitive model** is similar to a prototype in that it also represents a conceptual abstraction, but it differs in two important ways. Whereas prototypes represent conceptual abstractions of basic-level categories of physical entities such as dogs, cats and birds, ICMs mediate between superordinate-level

[17] This same cognitive principle underlies the phonemic structure of a language. A phoneme is similarly underspecified and is realized only by its fully specified phones. Furthermore, it is the phonemes that are stored holistically in our minds, rather than the wide range of phones.

[18] Representatives from levels below that of the basic are not perceived as a gestalt. Rather, one looks for the distinguishing features that enable one to make further discriminations, as, for example, in distinguishing the various breeds of cats or dogs.

conceptual abstractions such as events and their basic-level expressions in scenarios of human behavior.[19] For example, a w*edding ICM* is a conceptual abstraction that typically accounts for all of the concepts associated with a wedding, from the mailing of the invitations to various associated post-wedding activities. A *wedding scenario* may be thought of as comprising those events associated with the performance of the marriage ceremony, from the musical prelude to the married couple leaving the venue of the wedding. *Schema* refers to the conceptual structure associated with a scene and structures it in terms of the participants and objects, and their mutual spatial orientation. For example, the positions of the members of the wedding party during the ceremony is structured according to a schema. Events are linked together sequentially or in logical relations by *scripts*.

ICMs are tacit; we do not consciously construct them when we interpret an event. They are also automatic in that they are triggered by an occurrence of any part of them. Thus, the word *buy* will trigger a *commercial* ICM. Like prototypes, they are conceptual abstractions and are underspecified in that they give a general impression of the overall structure from which we may construct probable details.

We develop ICMs in ways analogous to those for developing prototypes, by superimposing mental images of the scenarios of related events. For example, in developing a wedding ICM we may superimpose the mental images of the events expressed in the scenarios of weddings we have experienced. As a conceptual abstraction, this ICM functions as a template which we use to anticipate and evaluate what takes place at the next wedding we attend. ICMs also exhibit prototype effects in that we may array the best examples of the wedding scenario near the center of an imaginary circle with increasingly deviant examples arrayed along imaginary axes towards the margin. The result is a graded membership.

Prototypes, ICMs and the basic level represent some fundamental properties of human cognition. They are grounded in cognition and should not be regarded as simply models used by the analyst to explicate a particular theory.[20]Each property reveals a different aspect of how, as humans, we form concepts and structure our knowledge of the world. What we learn from cognitive science pertains to our concept of humanity.[21]

**Humans are essentially basic-level creatures**. We can truly comprehend abstract concepts only in terms of our experience of phenomena at the basic level. Experience is our entry point for knowledge. We can know *love*, for example, only by experiencing loving behavior. It should be no surprise, therefore, that the Hebrew ידע and the Greek γινώσκω refer primarily to knowledge gained through experience. Vine (1981:298), regarding γινώσκω, characterizes such knowledge as relational. Louw and Nida (1988:I:328) state that it denotes knowing someone "through direct personal experience, implying a continuity of relationship" and warn that "it is important to avoid an expression which will mean merely 'to learn about.' Here the emphasis must be on the interpersonal relationship which is experienced." Accordingly, to deny (ἀρνέομαι) Christ is "to deny any relationship [or] association with" him (1988:I:453). It is also important to note that denial may involve actions as in Titus 1.16 where detestable, disobedient people "claim to know God, *but by their actions they deny* (ἀρνοῦνται) *him*."

*People are captives of the basic level. We cannot escape from the grip it has on our modes of conceptualization.* This claim is more fundamental than the claim that we are prisoners of our languages and cultures. That humans are capable of escaping their cultural influences is demonstrated empirically every time a person divests her or himself of one culture to assimilate to another one. To divest ourselves of our human specific modes of conceptualization, however, is impossible.

---

[19] For the purposes of this paper I am using *Idealized Cognitive Model* in a more restricted sense than does Lakoff (1987) by limiting it to the role of mediating between abstract concepts and events at super-ordinate levels and their realization at the basic level.

[20] Gibbs and his colleagues (Gibbs 1994, 1999, Gibbs, et al. 1997) provide considerable empirical support for the claims made within the discipline of cognitive science. Lakoff (1987:12-57) surveys the empirical support and the kinds of experiments used to support the psychological validity of these properties.

[21] Although secularists may regard this cognitive base as the result of evolutionary processes, there is nothing to contravene the belief of theists that these discoveries reflect what it means for humans to be created in the image of God.

### 3.2.2 Significance to translation of the ICM as mediating between abstract, superordinate-level concepts and their basic-level expressions

ICMs are one way for humans to associate superordinate-level, abstract concepts such as our emotions and virtues with how we express them in basic-level behavior. The apostle John made it very clear that love *requires* helpful actions: "Dear children, let us not love with words or tongue but with actions and in truth" (1 John 3:18). I suggest that all such abstract concepts need to be specified in terms of their basic-level expressions. To illustrate how this suggestion may be applied, I will first consider the concept of δικαιοσύνη 'righteousness' and then reflect upon other abstract concepts noted by Paul in Phil. 4:8.

In defining an abstract word, most dictionaries simply use other words to describe it along with a limited amount of referential information. Bauer (1979:196-97) provides very abstract English meanings for δικαιοσύνη:

(1) 'uprightness, justice' as a characteristic of a judge,
(2) in a moral and religious sense: 'uprightness, righteousness, the characteristic required of men by God, (a) in the sense of fulfilling the divine statutes, (b) as the compelling motive for the conduct of one's whole life,
(3) 'the righteousness bestowed by God', and
(4) the specific virtue of Christians,…almost equivalent to Christianity.

Louw and Nida (1987:I:452, 532, 570, 744) improve on this by defining it as involving actions;

(1) 'the act of God putting people right with him' or (God's) 'faithfulness',
(2) 'observances or practices required by one's religion',
(3) 'act of charity, alms, giving to the needy' and
(4) 'the act of doing what God requires.

What such definitions fail to account for is the actual range of behavior that fulfills the criterion of δικαιοσύνη. The ICM for righteousness embraces a wide range of behavior:

- Jesus' death is perhaps the best example of righteousness. It was the "one act of righteousness… that brings life for all men" (Rom. 5:18). Perhaps Jesus had this righteous act in mind when he ordered John to baptize him to *fulfill all righteousness* (Mt. 3:15).
- give to meet the needs of the poor (Mt 6:3),
- private prayer to address God (Mt 6:6),
- discreet fasting (Mt 6:17-18),
- give cold water (Mt. 10:42).

Although John preached "the way of righteousness" (Mt. 21:32), the Pharisees and Sadducees chose not to follow it; they did not "produce fruit in keeping with repentance" (Mt. 3:8). Rather they chose to act in ways that were only marginally righteous:

- giving alms to receive praise (Mt. 6:2),
- praying publicly to gain attention (Mt. 6:5),
- obvious fasting to impress people (Mt. 6:16), and
- fasting twice a week and tithing (Luke 18:9-12).

It is not that these activities were not righteous; Jesus asserted that they were. But such acts were so marginal that unless a person's behavior was more exemplary than that of the Pharisees and the teachers of the law, they would not enter the kingdom of heaven (Mt. 5:20). This ICM evidences prototype effects in

that there is a gradation from behavior that may be regarded as exemplary of righteousness to some rather bad examples[22]

This understanding of righteousness in terms of an ICM is consistent with Paul's use of abstract concepts in Phil. 4:8-9. Note how Paul enjoins the Philippian Christians to behave in ways that are consistent with a list of virtues:

> Finally, brothers, whatever is *true*, whatever is *noble*, whatever is *right*, whatever is *pure*, whatever is *lovely*, whatever is *admirable*—if anything is *excellent* or *praiseworthy*—think about such things. Whatever you have learned or received or heard from me, or seen in me—put it into practice.

Here Paul cites a number of virtues: ἀληθῆ 'true, having integrity' as evidence of moral quality,[23] ἀρετὴ 'noble, virtuous', δίκαια 'right, proper', ἁγνά 'pure, faultless', ἔπαινος 'excellent, praiseworthy', σεμνά 'admirable, dignified', εὔφημα 'praiseworthy, worthy of approval' and προσφιλῆ 'lovely, pleasing'. All of these virtues represent abstract concepts which are relevant to a superordinate level.

Although Paul cites these virtues as abstract qualities, he does not drop the matter there. Rather, he enjoins his readers to think about 'whatever things', *i.e.*, kinds of behavior that are associated with each of the virtues and then to put them into practice. This suggests that his readers had some idea of the kinds of behavior that each virtue entailed, i.e., they had ICMs for each of them.[24] We may gain further insight into what he likely had in mind by checking his other writings to see what behaviors he may have associated with particular virtues.

In 1 Tim. 3:8, 12, Paul writes that an elder is σεμνούς 'admirable, dignified' when he is sincere, has only one wife, manages his children and his household well, does not drink too much, does not pursue dishonest gain, and keeps clear [conscientiously maintains] the insights he has into the faith. Moreover, what is σεμνούς for an elder's wife is that she be temperate, trustworthy and not talking maliciously. What this suggests is that a full understanding of all such abstract concepts is incomplete without an indication of the appropriate behavioral correlates.

What is of paramount importance is that we recognize that ICMs differ from society to society. The "whatevers" of ἔπαινος 'excellent, praiseworthy' will be different for middle class Americans of Anglo-Saxon origin, the French, the Maasai of Kenya and the Selepet of Papua New Guinea. So, when the Selepet people read that Paul wants his readers to put into practice whatever reflects *âilonggo* 'excellence" (behavior that is better than *âlepnge* 'good'), they will think of a range of behavior that is not wholly like what Paul had in mind when he wrote that they should put into practice "whatever" is ἔπαινος. The translator needs to know the ICM of *âilonggo*, as well as the ICMs of related concepts in Selepet, before attempting to translate ἔπαινος. In accounting for the meaning of such abstract concepts, the focus will be on the *normative behavioral range* of the TL audience, not on a comparison of TL behaviors with specific behaviors recorded in the SL text. This is necessitated not only because the ranges will show only partial overlap, but also because the behaviors recorded in the SL text most likely do not represent a full range.

The significance of this insight for translation is that *the meanings of the virtues as abstract concepts consist more in the associated behaviors than in a set of semantic markers*. Translators can no longer rest

---

[22] We see the same gradation in behavior in wickedness as the opposite of righteous. Betrayal ranks as perhaps the most central example of wicked behavior (John 19:11). Note that its opposite, as the best example of *commitment* or *love*, is laying down one's life for another (John 15:13). Other less central examples include buying the power of the Holy Spirit (Acts 8:19-22), imprisoning a debtor (Mt. 18:23-35), not using one's capabilities (Mt. 25:14-30, hitting someone on the cheek (Mt. 5:39) and suing for a tunic (Mt. 5:40).

[23] On August 10, 2000 President William Clinton said in an interview with Rev. Bill Hybels that he "had to come to terms with a lot of things about the fundamental importance of character and integrity." Then he defined *integrity*: "Integrity, to me, means—is a literal term. It means the integration of one's spirit, mind and body being in the same place at the same time with everything, doing what you believe is right and you believe is consistent with the will of God" (Clinton 2000). Having thus spoken, he maintained integrity as an abstract quality rather than as a virtue that should be reflected in behavior.

[24] Note that in Acts 11:23 the NIV translators express the abstract concept of χάρις 'grace' in terms of basic-level behavior by adding the phrase " the evidence of": "When he [Barnabas] arrived and saw *the evidence of* the grace of God" (τὴν χάριν [τὴν] τοῦ θεοῦ).

confident in the methodology of determining the meaning of a TL language abstract concept by comparing its presumed semantic features with those of a SL word.

Another important entailment of this insight is that *words at the basic level should not be compared with words at an abstract, superordinate level*. It is not coincidental that the "fruits" of the Spirit (Gal. 5:22)—*love*, *joy*, *peace*, *patience*, *kindness*, *goodness*, *faithfulness*, *gentleness*, and *self-control*—seem more appropriate as superordinate-level abstract concepts, whereas the "spiritual gifts" (1 Cor. 12:4 ff.) seem more appropriate at the basic level: the "different kinds of service [and] working" with the associated "manifestations"—*messages*, *healings*, *miracle-working power*, *recognition of gifts* from God or other sources, and *speaking in tongues* or *interpreting* them. Also compare the particular roles listed in 1 Cor. 12:28ff—apostles, prophets, teachers, workers of miracles, healers, administrators, speakers in tongues—which also seem to describe basic-level activities. In contrast to the gifts, Paul encourages them to seek faith, hope, and love, which are more abstract concepts appropriate to the superordinate level.

Finally, abstract concepts also evidence a hierarchy. Notice how Paul describes *love* in 1 Cor. 13, "Love is patient, love is kind.…" *Love* cannot be compared with *patience* or *kindness* any more than *animal* can be compared with *dog* or *cat*. Just as a *dog* is a kind of *animal*, so also is *patience* an expression of *love*; an *animal* is not a kind of *dog*; neither is *love* an expression of *patience*. *Any confusion of words from different levels is likely to result in a skewed understanding at best, nonsense at worse.*

### 3.2.3 Significance to translation of the ICM as structuring scenarios

Let us begin by considering the musical instrument depicted in Illustration E.



**Illustration E: Stringed instrument**

Usually when people are presented with this picture, they identify it as a *violin*. This identification is consistent with the scene in Illustration F which depicts two violins, a viola and a cello.[25]



**Illustration F: String quartet playing chamber music**

[25] Image located at www.lancs.ac.uk/users/music/images/meds.gif.

Next, consider the same instrument in the scene in Illustration G.[26] Here it is grouped with a banjo, a guitar and a double bass.



**Illustration G: An ensemble typical of those that play Bluegrass.**

Is it still called a *violin*? No! Now it is identified as a *fiddle*. What is the difference, then, between a violin and a fiddle? Consider the Random House Webster's College Dictionary's definitions:

*violin* 'the treble instrument of the family of modern bowed stringed instruments, held nearly horizontal by the player's arm with the lower part supported against the collarbone or shoulder (1992:1488).

*fiddle* 1. 'a musical instrument of the viol family',
2. 'violin' (1992:494).

These definitions are not all that helpful. So, let us consider a linguist's definition:

*fiddle* 'a violin that is regarded less elegantly' (Chafe, 1970:58).

Chafe's definition gives a hint that an understanding of what constitutes a fiddle involves more than just a simple statement of the physical characteristics of the instrument, but it adds little more than his evaluation of the scenario associated with a fiddle.

The point to be made here is that we cannot identify this stringed instrument of the viol family apart from a scenario. In the first case, for a violin, it is a musical performance of a string quartet, and in the second case, for a fiddle, it is a musical performance of a bluegrass group.

It is important to note that *we access a scenario as a gestalt, holistically.* The gestalt characteristics of scenarios entail that they be internally coherent. Significant changes with regard to any one item in a scenario simply introduce incoherence. For example, we have noted that in each of the two scenes the instrument is grouped with other stringed instruments, with another violin, a viola and a cello in the string quartet, but with a banjo, guitar and a double bass in the group that plays bluegrass.[27] If the bluegrass musicians were to replace the banjo with a balalaika or the double bass with a harp, the scene would be incoherent. Similarly, it simply would be inappropriate if the musicians were hatless and wore T-shirts and cut-offs.

[26] Image of The Dave Verney Band located at www.angelfire.com/ky2/mybluegrass/DVB.html.
[27] Musicians may make modifications to the instrument such as sanding the bridge so that the bow can more easily play two strings at the same time, adding to the number of strings, or substituting metal strings.

Furthermore, the scenarios include not only the components of the scene but also the way in which the instruments are held and the way in which the music is played. Because scenarios are accessed holistically, any significant component of a scenario will evoke the whole scenario. Thus, when we speak of a *fiddle* and *bluegrass music*, our use of those words typically evokes the scenario of a *hoe-down* or of a *bluegrass music festival*. We have a repertoire of ICMs for a variety of musical performances, and when we attend a bluegrass music festival or a hoe-down, we have expectations of what will take place based upon our ICMs of those events.

Consider the scenario of Illustration H.[28] This illustration is more than just a construal of a scenario; it is an act of translation. Specifically, it is a translation for American consumers of an event to illustrate the slogan "Foresee the unforeseen". We may ask whether, as an act of translation, this scenario adequately communicates the slogan?

First of all, the likely message is that although one may be enjoying a carefree life, there is always the possibility of a calamity. The prudent person is one who takes precautions against unforeseen dangers. Those who have lived in the tropics may question the wisdom of sitting beneath a coconut palm. My experience of living in the coastal areas of Papua New Guinea suggests that a local person would not sit under a coconut palm if there were any danger of being struck by a falling coconut. When still in the husk, the coconut may weigh as much as fifteen pounds and the palm may be as much as thirty feet tall. Americans, however, would not be aware of such dangers.

Secondly, and more importantly, this scenario represents an event that could not possibly occur. First of all, the coconut lacks a husk, a thick green protective covering (Illustration I). Husked coconuts never fall from coconut palms. Secondly, the brown color indicates that the coconut is cured; freshly husked coconuts are cream colored. What the coconut does depict, however, is what Americans see when they go to the local grocer to buy a coconut.

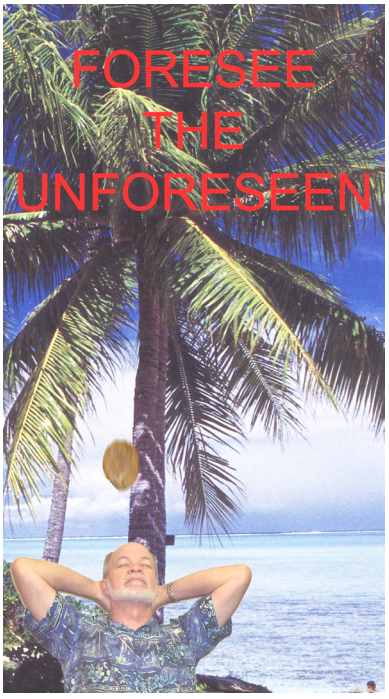


**Illustration H: Falling coconut**



**Illustration I: Unhusked coconut**



**Illustration J: Coconut**

[28] Illustration H is a faithful representation of one distributed by a national corporation to its consumers.

Let us return to the question of whether this scenario adequately communicates the slogan. A number of respondents said it communicates satisfactorily because it is "contextualized" for Americans. Indeed, it is so well contextualized that, when the scene was presented to Americans, the majority was unaware that the scene is incoherent, that it presents an impossible scenario. Because of that very fact, many translators would reject this construal as unacceptable. As a minimum it ought to express reality, an event that presumably could occur to someone living in an equatorial region.

It is also of interest that, in all likelihood, this scene represents the work of a group of national translators, in this case Americans whose mother tongue is English. Moreover, it is further likely that the work went through one or more checks prior to being distributed. In light of the incoherent construal, however, it may be further assumed that neither the translators nor the checkers consulted with someone from an equatorial country, someone who would know that brown, cured coconuts do not fall from palms. A lesson to be learned here is that it is presumptuous to assume that the fidelity of translations will be guaranteed if those translations are done by teams of educated national translators.

The act of translation imaged in Illustration H has a wider significance for translators in that each gospel story also relates a scenario, often comprised of a number of events. Such stories are similarly grounded in a holistic knowledge of appropriately coherent scenarios, so that those who translate these stories must ensure that the scenarios depicted in the translations exhibit a corresponding coherence. The fact that some respondents accepted Illustration H as an adequate translation solely because it communicated the slogan "Foresee the unforeseen" invites the question, "Is it permissible to construe events recorded in the Bible as events that would likely never occur, if such construals communicate the intention of the passage?" This is not an academic question, for some translators, who have substituted cultural artifacts when translating biblical events, have inadvertently created unlikely, if not impossible, scenarios.

Consider, for example, Lk 5:37. Jesus says, "No one pours new wine into old wineskins. If he does, the new wine will burst the skins, the wine will run out and the wineskins will be ruined. No, new wine must be poured into new wineskins." Some translators in Papua New Guinea made cultural substitutions for the wineskins, but they did so without considering that in doing so they created dissonance in the resulting scenarios. Because the scenario is that of a liquid being poured into a container, the translator substituted the prototypical container in the target language, viz., a coconut shell cut in half which could serve as a drinking vessel (Illustration J).

The translation reads, "No one ever pours new wine into coconut shell drinking vessels." The sad fact is that this statement is absolutely correct, no one ever has, and no one is ever likely to do so. Wine is not usually drunk from such shells, and certainly new wine would not be poured into one for fermentation. When translators substitute coconut-shell drinking vessels for wineskins, they create a scenario that is highly dissonant; it lacks cohesion and does not convey the point of the passage.

In another language, the translators made a cultural adjustment that involved the whole scene in order to maintain the necessary coherence. A widespread Papua New Guinean method of cooking fresh vegetables is to pack the vegetables into a freshly cut bamboo tube. The tube is made from a 5 inches in diameter by 30-inches long section taken from a species of a large bamboo that has a thick wall with nodes about every twelve inches. All nodes but the bottom one are punched out, the food is packed in, and the open end is plugged with banana leaves. To cook it, a person places it on an open fire and turns it frequently. As the fire cooks the food, it dries out the bamboo which becomes brittle and is only useful thereafter as firewood. Thus the translation reads, "No one takes a used bamboo cooking tube, fills it with fresh vegetables, and places it on the fire. For if they do, the fire will consume the bamboo tube, the vegetables will be ruined, and the tube will be lost as well."

There is a principle underlying the coherent translation that is based upon the scenario of cooking food in a bamboo cooking tube. I suggest the name *Maintain Scenario coherence*. Without assigning a name to it, I simply suggest a tentative wording for it: "When construing a scenario, maintain the internal coherence and relevant knowledge structures of the target language in order to present a coherent holistic portrayal." This approach is reminiscent of the blueprint model, an alternative to the CMC (Tomlin et al. 1997 and Ponterotto 2000).

Consider the story of Joseph of Arimathea (Mt. 27:57-61; Mk. 15:42-47; Lk. 23:60-54; Jn. 19:38-42) This event serves to provide the transition from the crucifixion to the resurrection. The main point is the transferal of Jesus' body from the cross to the tomb to set the stage for the resurrection. Note that the differences in the gospel accounts mainly pertain to how much schematic information each writer includes. Luke writes that others had written accounts on the basis of what was handed down by eyewitnesses. It may be assumed that saliency played a major role in how these other accounts were composed. For example, Mark writes, "he [Pilate] gave the body to Joseph", but Matthew writes, "Pilate ordered that it be given to him." Luke chooses only to say that Joseph went to Pilate and asked for it, and John notes only that Joseph had Pilate's permission with no further comment on how he obtained it.

In construing this event in the Selepet language, the semantics of the Selepet verbs representing this transferal require a reconstrual of the event. To express the transferal one has to choose from a set of eight verbs that denote different ways of holding something (in one's hands, in one's arms, on the hip, under the armpit, piggyback, sitting on shoulders, in a string bag suspended from the head, in a string bag suspended from the shoulder), and from a set of six verbs indicating motion (movement on the level, ascending, descending, whether it is over a short distance or long distance, and its orientation with regard to a reference point for the reporter).

How one construes the movement is wholly conditioned by the facts of the situation. How the body is held, however, has to be construed in light of schematic information, some of which is left implicit in the source documents. We have already noted that whereas Mark writes that Pilate gave Joseph the body, Matthew writes that Pilate ordered the body to be given to him. Simply stated, it is right to assume that high-ranking officials do not personally give dead bodies to those who request them. In fact, we may assume that *give* is used metonymically for the whole process which follows, since Mark writes that after Pilate gave Joseph the body, Joseph took the body down.

We may, however, also assume that wealthy men such as Joseph did not personally remove bodies from crosses. We know from John's account that Nicodemus went with Joseph, but he was of little help since he was carrying about seventy-five pounds of spices. In all likelihood, just as Pilate ordered the body to be given to Joseph rather than doing so himself, Joseph took a group of men with him, and it was these unmentioned men who removed the body from the cross and carried it to the tomb.

In light of all this, Mark's account in the Selepet language states that Pilate granted Joseph his request. Then Joseph bought cloth, took his associates with him and removed Jesus from the cross. After wrapping Jesus with the cloth, they carried him to a place hollowed in rock.

What is important is that the natural integration of knowledge and flow of information in the target language requires that primacy be given to the construal of an event according to the exigencies of that language, not according to some attempt to match low-level units of translation. The salient features of coherent conceptualization within the target language are more determinative than are any attempts to preserve *incidental* components from the SL scenarios, whether explicitly stated or implicitly conveyed.

## 4. Understanding analogically: simple and conceptual metaphors

In addition to understanding by direct experience, we can also understand by making an analogy of an unknown concept to our previous experience. The classical treatments of metaphor treat it as a non-literal statement that invites a comparison between an object and the concept to be conveyed. Thus, Jesus referred to Herod as a fox ( ἀλώπηξ Luke 13:32). We know that Herod is not literally a fox, so we have to discover in what sense Herod is compared to a fox. The general opinion is that Jesus is implying that Herod is cunning and treacherous, but perhaps merely worthless (Louw and Nida 1988:I:755). Generally the speaker controls the metaphor.

Such a *simple metaphor* is generally treated as an isolate and its meaning is based wholly on a perceived similarity between the referent and the object to which it is compared. Once a meaning is recognized it is simply entered into a mental lexicon. When we hear the metaphor "fox" again, it evokes the literal equivalent "crafty person".

*Conceptual metaphors* differ significantly from simple metaphors. When we think about abstract concepts, we are usually unaware that underlying our thoughts are tacit, complex metaphorical structures which structure our understanding of those concepts in terms of concrete, real life experience. Nor are we aware that these same metaphorical structures in large measure direct us to think along certain lines and not others. We simply regard it as natural and logical to think of something in a given way. We may regard the use of a conceptual metaphor as a mainly tacit conceptual process which structures how we conceptualize one thing, usually an abstract concept, in terms of another, usually a concrete object or experienced event.

As an example of such a metaphor, consider how we use our knowledge about food consumption to talk about ideas. Each of the sentences in Table K expresses a concept that constitutes part of the conceptual metaphor ASSIMILATING IDEAS IS ASSIMILATING FOOD.[29] Moreover, conceptual metaphors are subject to innovation. Thus one might hear such novel expressions as "I don't want to cause you to have cognitive indigestion."

Notice that there is an experiential basis for associating the activities of taking in and assimilating food with the activities of taking in and assimilating ideas.[30] Food enters the body through the mouth, is chewed, swallowed, digested, and passes out of the body. Ideas enter through the mind, are interpreted, reflected upon, assimilated, and passed on to others.

There are three major characteristics of conceptual metaphors:

1. *They only partially map out reality*. This is evident in how Paul used conceptual metaphors. To highlight the concept of discipling people, he used a number of diverse conceptual metaphors and, when appropriate, switched from one to another. In 1 Cor. 3:5-9b, he argued that he and Apollos were simply workers in a field owned by God, who also gave the growth. His argument is based upon the metaphor DISCIPLING A PERSON IS WORKING IN A FIELD.[31] In the middle of verse 9 (3:9c-15; see also Eph. 3:19-22), he abruptly switched his focus to the quality of the individual believer's contribution to the community. The metaphor underlying his comments here is DEVELOPING A GROUP OF BELIEVERS IS CONSTRUCTING A BUILDING. The metaphor includes a number of metonymies: *people are various parts of the building* and *Christ is the foundation* with *gold*, *silver*, *costly stones*, *wood*, *hay* and *straw* as potential *building materials* standing for the quality of workmanship. Note the "unused" parts: the roof, walls, staircases, etc. Although potentially available for reference to different roles that people may have, they are not used. Presumably, such elaboration would have extended beyond the point he wished to make, viz., the foundational character of Christ in relation to Christians. It is important to note that any extension of the metaphor has to come from Paul as the creator of the metaphor.[32] In 1 Cor. 12 his appeal is for the Corinthians to recognize the diversity of spiritual gifts and still function together in unity. It is based upon the metaphor WHOLESOME PERFORMANCE OF A GROUP OF PEOPLE IS THE INTEGRATED FUNCTIONING OF A HUMAN BODY. He apparently felt no need, however, to bring in Christ as the head of the body, although he did so when writing on the issue of unity to the Ephesians (4:15-16).

---

[29] I prefer to express conceptual metaphors with verbal expressions rather than nominals. Others may express this metaphor as IDEAS ARE FOOD.

[30] Lakoff (1987) identifies this as the *ontology* of the metaphor.

[31] Other similar metaphors not used by Paul include CARING FOR PEOPLE IS OVERSEEING A VINEYARD (Mt. 21:33-41; Mark 12:1-9; Luke 20:9-16). This imagery was earlier stated in Isa. 5:1-12 where the vineyard stands for Israel and the owner stands for the Lord of Hosts.

[32] Those who use metaphors generally do so to make a single point unless the user of the metaphor specifically indicates that the metaphor is intended to convey multiple senses. Those who wish to draw out multiple senses must bear the burden of proof for demonstrating the likelihood that those senses were in the mind of the person who created the metaphor. Jesus often constructed complex parables and assigned meanings to the component parts; e.g., the parables of the sower and the weeds (Mt. 13:1-23). The parables of the lost sheep, the lost coin, and the lost son (Lk. 15), however, share the single theme that God goes to great lengths to restore a relationship with people. Nevertheless, many interpreters of the parable of the lost son have asserted far greater significance, not only for the parable as a whole, but also for the classes of people purported to be represented by the participants in the parable. Thus they have assigned them multiple readings based upon putative perspectives for each of the participants.

| | |
|---|---|
| 1 | She presented some real *food* for thought. |
| 2 | These ideas are too new; I have to *ruminate* on them for a while. |
| 3 | He kept trying to *cram* his ideas *down our throats*. |
| 4 | Frankly, I find his ideas *unpalatable*. |
| 5 | He gave a bunch of *half-baked* ideas. |
| 6 | She couldn't *swallow* anything he said. |
| 7 | What he said really *stuck in her craw*. |
| 8 | He found what they had to say really hard to *digest*. |
| 9 | Do you subscribe to Reader's *Digest*? |
| 10 | Mark *gobbles up* every word. |
| 11 | As he spoke, I kept thinking, "Where's the *meat*?" |
| 12 | After intense interrogation, the criminal spilled his *guts*. |
| 13 | The next day the candidate had to *eat* his own words. |
| 14 | What she said is enough to make me *bilious*. |
| 15 | His comments left a *bad taste* in my mouth. |
| 16 | He has *verbal diarrhea*. |
| 17 | She *devours* everything she hears. |
| 18 | Let me *chew* on it for awhile; then I will give you an answer. |
| 19 | She *mulled* it over all morning. |
| 20 | What the senator said was absolute *garbage*. |
| 21 | We'll break for lunch and *regurgitate* these ideas in the afternoon. |
| 22 | I will have to let your ideas *percolate* for awhile. |
| 23 | I'm sick of *pre-digested* theories; I want something more challenging. |
| 24 | When she tells a story, every episode is a *morsel to savor*. |
| 25 | His lectures may be eloquent, but he never delivers the *bacon*. |

**Table K: ASSIMILATING IDEAS IS ASSIMILATING FOOD**

2. *They are vehicles for our understanding of the world*. They represent one of the cognitive processes that we utilize in conceptualizing and interpreting experience. Lakoff and Johnson (1999) demonstrate that the concept of *time* as expressed in English is largely structured by conceptual metaphors that have a spatial orientation. A likely experiential basis for it is that as the sun "comes up" the day "comes" and when the sun "goes down" the day "goes" and the night "comes." From the standpoint of a person as a *stationary observer*, we may say, "As Christmas approaches, people crowd the shopping malls," or as a *moving observer*, we may say, "As we approach Christmas, we will find more people crowding the shopping malls."

   The biblical view is primarily that of the stationary observer, both in terms of approaching future time and approaching past time:

   - "a covenant for all generations to come" (Gen. 9.12),
   - "where he built a city and called it Luz, which is its name to this day" (Judges 1:26),
   - "before the days of trouble come and the years approach when you will say" (Eccl. 12:1),
   - "as in days gone by, as in former years" (Malachi 3:4),
   - "As evening approached" (Mt. 14:15) and
   - "I have fulfilled my duty to God in all good conscience to this day" (Acts 23:1).

The topography where the Selepet people of PNG live is extremely rugged with little level land. It is not surprising, therefore, that for them the past is down and the future is up: *emelâk embângan* 'long ago, way down below' for "a very long time ago" and *Sande kakngan* 'on top of Sunday' for "after next Sunday".

3. *They are culturally constrained*. We understand concepts based upon our interactions within a particular sociocultural environment. In such environments the conceptual metaphors are based upon cultural models. Thus, Paul uses a number of conceptual metaphors that are structured around athletic contests as cultural models. Familiar ones include the race and the boxing match.

### 4.1. Understanding truth through a Western conceptual metaphor

A dominant conceptual metaphor for speakers of English is TRUTH IS AN OBJECT.[33] Here I am using *object* in the sense of a physical entity, not in the sense of a grammatical category. Thus, I might see something under a couch and say, "I see an object under the couch, would you please get it for me." As an object, truth may be personified and given the capacity for independent action. This construal provides us with a powerful imagery that allows for a very fertile range of conceptual metaphors, far more than we can handle in the constraints of this paper. What is important to note is that this is the default conceptual metaphor for truth in English.

**The greater the size of the object, the greater the degree of truth.**
There is not one *iota* of truth in her claims.
There is a *nugget* of truth in every verse.
He was standing on a *mountain* of truth
I swear to tell the *whole* truth, not *half* truths, or *partial* truths.

**Personification allows truth to participate in the EXPERIENCING LIFE IS GOING ON A JOURNEY metaphor.**
We must *pursue* truth relentlessly.
But wherever the truth *leads*, it leads.
A lie can be halfway around the world before truth *gets its boots on.*
Truth *stands at the gate*.
He wouldn't recognize the truth if it were *staring* him in the face.

**TRUTH IS AN OBSTACLE**
Some people always try to *find a way around* the truth
They constantly *sweep aside* the truth.

**TRUTH IS A SHIP**
Politicians are too often *dislodging* the truth from its moorings.
Truth is *adrift* in a sea of doubt.

**TRUTH IS A HIDDEN OBJECT.**
Eventually the truth came to light.
John may never discover the truth.
We need to dig until we expose the truth
We need to recover truth.

**TRUTH IS A DISGUISED OBJECT.**
Clinton has been accused of *camouflaging* the truth.
Truth does not come in different *shades*.

[33] It seems more appropriate to express this metaphor with nominals rather than verbal expressions because of such correlations of the amount of truth with the size of the object. A potentially satisfactory verbal expression is MANAGING TRUTH IS MANAGING AN OBJECT. What follows further develops ideas presented in McElhanon (2000b).

**TRUTH IS A PIECE OF HANDIWORK.**
*Handle* the truth carefully.
Don't *twist* the truth.
They always *distort* the truth.
He *stretches* the truth.
Others attempt to *shred* the truth.

**TRUTH IS A BUILDING.**
Some would wish to *dismantle* the truth.
Somehow we must *reconstruct* the truth from the evidence.
Communism consistently tried to remove the *foundations* of truth.

### 4.2. Understanding the biblical concept of truth

The biblical concept of truth is integrated with the concept of life, in particular a life characterized by faith. This is true of both testaments of the Bible. The life of faith is grounded in the conceptual metaphor EXPERIENCING LIFE IS A GOING ON A JOURNEY.

#### 4.2.1 An elemental conceptual metaphor: EXPERIENCING LIFE IS GOING ON A JOURNEY

Our experience of the self-other distinction is undoubtedly the most fundamental experience for living things beyond that of mere existence. Each of us experiences others, and Kearney's (1984) claim that the self-other distinction is a worldview universal stands unchallenged. It may be confidently claimed that the foundational human experience is that of interaction with others, and such interaction is generally achieved by closing the gap between ourselves and others, prototypically by walking from our position at the originating point to the other at the ending point. This movement is regarded as following a *source-path-goal* image-schema.[34] Conceptual metaphors that are grounded in image-schemas are potentially universal in comparison to those based upon cultural models such as that of EXPERIENCING LIFE IS SAILING ON A JOURNEY which likely underlies both Paul's (1 Tim. 1.20) comment that Hymenaeus and Alexander "have shipwrecked their faith" and Peter's (2 Pet. 3.17) warning that his readers not "drift off course and run aground" (Bauer 1979:243, Louw and Nida 1988:I:548).[35]

Of the three components of this image-schema, the one that shows the greatest potential for variation is that of movement along a path. Changes that affect one's destination are significant in how they affect the nature of the movement along the path. The significance of starting a journey in Los Angeles and ending it in Hawaii rather than in Riverside, CA is found in the likely mode of transportation and the potential conditions of the journey. Hawaii can only be reached by sea or air, and few would consider any form of travel to Riverside other than by land. Moreover, each journey is subject to a potentially endless list of differing local conditions.

A journey typically has the following characteristics:

**Movement towards a destination is intentional.** Those who are traveling, but have no intended goal in mind, are not generally regarded as being on a journey. The sentence *He went on a journey to nowhere* is an oxymoron if it is taken literally.

*He lost his sense of direction and wandered aimlessly in the desert.*
*The pilots intended to land at Brussels but mistakenly landed at Amsterdam.*

**Movement towards a destination is purposeful.** A person has a reason to close the gap.

*If he had really wanted to go visit his aunt, he would have made an effort to do so.*

[34] See Johnson 1990 and Cervel 2003.
[35] Newmark, (1985:320) notes that Lakoff and Johnson (1980) present both basic conceptual metaphors that are likely centered in universal human activities such as "manufacture, trade, life/birth, health, disease," etc. and stock conceptual such as those based upon sports.

**The shortest, most direct route to a goal is preferred to a circuitous one.** Travelers generally do not go off on side tracks.

*Taxi drivers some times get higher fares from tourists by going through the back streets rather than taking the freeway.*
*We had an eighteen-mile detour between Urbana and Evansville.*

**Progress is expected**. A journey that is never started hardly qualifies as more than a plan.

*Shirley was expected in Springfield yesterday morning, but she never left town.*
*The Mars Odyssey space probe is aerobraking and expected to settle into a two-hour long, circular orbit.*

**Journeys entail conditions, whether obstacles, hindrances or helps.**

*A jackknifed eighteen wheeler shut down the interstate for several hours.*
*The new commuter train service to downtown saves half an hour over the freeway.*

*EXPERIENCING LIFE IS GOING ON A JOURNEY—English*. This metaphor is so basic that it permeates our conceptual structure and frames many activities, far more than can be illustrated in the limitations of a paper.

*She put her life on hold; it is her wilderness experience.*
*Whenever he lectures he never gets straight to the point; he always meanders.*
*His road to the presidency became nothing but a series of detours.*
*Their marriage took a wrong turn and life became a dead end.*
*Our cause requires people who will stay the course; dropouts simply aren't welcome.*

Going on a journey is such a basic and universal human activity that it is not surprising that it serves as the basic conceptual metaphor for the life of faith. It is particularly appropriate when faith entails a commitment to how one lives rather than merely an acceptance of what is regarded as factually true. Everyone goes somewhere. Such universality makes it more likely that the similarities between journeys of faith in the Old Testament and in the New Testament are due to the universal features of a journey

*EXPERIENCING A LIFE OF FAITH IS GOING ON A JOURNEY—New Testament.* In the New Testament the concept of experiencing life is clearly exemplified by the conceptual metaphor of going on a journey. John 8:12 records that Jesus said to the people, "Whoever follows me will never walk (περιπατήσῃ) in darkness" and later wrote, "I have no greater joy than this, to hear of my children walking (περιπατοῦντα) in the truth" (3 John 1:4, NASB).

Jesus set forth the characteristics of the conceptual metaphor EXPERIENCING LIFE IS GOING ON A JOURNEY. First of all, there are alternate roads (ὁδός). The road that *leads to destruction* is *broad*, has a *wide entrance* and *many enter it* (Matt. 7:13-14, also see Phil. 3:17-19). This is the only reference of an entrance to this road. Hereafter it is assumed that all people travel on this road unless they have chosen the alternate road that leads to life. Those who walk on this road *walk according to the flesh* (Rom. 8:4) and *in the futility of their thinking* (Eph. 4:18). They are *disobedient and dead in sin* as they follow the course of this world and are *influenced by the prince of the power of the air* (Eph. 2:2 NASB).

The road that *leads to life* is *narrow*, has a *narrow entrance*, and *few find it*. As we shall see by subsidiary conceptual metaphors, progress in moving along the road is much more arduous.

Jesus casts himself as the *road* (ὁδός John 14:6) and also as the *entrance* (θύρα) to the sheep pen through which those who enter will be saved (John 10:9).[36]

Travelers on the road that leads to life do not travel unaided, however, for they *are following Christ* (ἠκολούθησαν αὐτῷ Mark 1:18). Those who follow Christ are never in the darkness, for Jesus is light for them, "I have come into the world as a light, so that no one who believes in me should stay in darkness" (John 12:46). Moreover, they are *walking by the Spirit* (πνεύματι περιπατεῖτε Gal. 5:16), are *guided* by

[36] In John 10 θύρα is translated as 'gate', but in Luke 13:22 as 'door'.

the Spirit (ὁδηγήσει John 16:13) and *led by the Spirit* (πνεύματι ἄγεσθε Gal. 5:18). They *walk along side* of the Spirit (στοιχῶμεν Gal 5:25) and are regarded as walking *according to* the Spirit (κατὰ πνεῦμα Rom. 8:4), walking *worthily* (Col. 1:10, 1 Thess. 2:12, *in the footsteps* of Abraham's faith (Rom. 4:12), in good works (Eph. 2:10), and in newness of life (Rom. 6:4 NASB).

As they travel they are to flee the things associated with the love of money and pursue a number of virtues: "righteousness, godliness, faith, love, endurance and gentleness" (1 Tim. 6:11) and to "flee the evil desires of youth, and pursue righteousness, faith, love and peace, along with those who call on the Lord out of a pure heart" (2 Tim. 2:22), to which we may add the law of righteousness (Rom. 9:31), hospitality (Rom. 12:13), what makes for peace (Rom. 14:19, cf. Heb. 12:14, 1 Pet. 3:11), love (1 Cor. 14:1) and what is good (1 Th. 5:15).

There is a danger, as some people, "eager for money, have wandered from the faith and pierced themselves with many griefs" (1 Tim 6:10). This is reminiscent of James' warning, "My brothers, if one of you should wander from the truth and someone should bring him back, remember this: Whoever turns a sinner from the error of his way will save him from death and cover over a multitude of sins" (James 5:1-20). Peter notes that some "have left the straight way and wandered off to follow the way of Balaam son of Beor, who loved the wages of wickedness" (2 Pet. 2:15).

Words that are usually interpreted as indicating a violation include παραβαίνω 'to go aside, deviate' as when the disciples deviated from the "teaching handed down by our ancestors" (Matt. 15:2). One may also go beyond (προάγω) the established limits of a teaching as in 2 John 9a "Anyone who runs ahead and does not continue in the teaching of Christ does not have God…." All of these relate to movement along a road.

When one walks along a road, there is always the danger of stumbling and falling. A Christian, on the journey of faith, is not to do anything that might cause someone else to stumble. Paul said that he put no obstacle (προσκοπήν) in anyone's road, so that his ministry would not be discredited (2 Cor. 6:3). He told both the Roman and the Corinthian Christians not to eat meat if to do so would cause a brother to stumble (προσκόμματος Rom. 14:20, πρόσκομμα1 Cor. 8:9) or to fall (προσκόπτει Rom. 14:21), lest the weaker brother be "destroyed" by their knowledge (1 Cor. 8:11).

Peter writes to his brothers that they should "be all the more eager to make [their] calling and election sure" by putting into practice a number of things, which, if they do, they would never fall (2 Pet. 1:10).

### 4.2.2 Truth as expressed by propositions

We have already noted that in the Aristotelian tradition truth is regarded as a property of sentences, so that what a sentence states has to correspond to reality. It is important to note that those who hold to the correspondence theory of truth can find biblical support. When Jesus indicates that what he is about to say is true, he uses the phrase ἀμὴν ἀμὴν λέγω 'I tell the (solemn) truth', with the reduplicated form, usually in John's gospel, indicating emphasis (Louw and Nida 1988:I:673). In all cases the phrase is immediately followed by the statements regarded as true.

In what follows we will further elaborate upon the biblical concept of truth. What we will see is that the biblical concept represents the notion of *truth as primarily experiential rather than as rational*. In particular we will see that it concerns more about how we ought to live rather than what we ought to know or say. Along with these elaborations we will reveal how the English translators have consistently misconstrued the biblical concept.

#### 4.2.2.1 TRUTH IS A ROAD[37]

The word group normally representing *truth* includes the words ἀληθής 'truth' and ἀληθινός 'true'. When ἀληθής occurs with λέγω 'speak, tell', it is usually translated the same as ἀμὴν λέγω, as in John 8:45 "Yet because I tell the truth [ τὴν ἀλήθειαν λέγω], you do not believe me!"

This translation supports the biblical concept of truth as being wholly in accord with the Aristotelian concept of truth. Roger Nicole (1983:293), in his article *The Biblical Concept of Truth*, notes that the range of meaning for Hebrew 'emeth [אמת] is represented in Greek with ἀλήθεια assuming "conformity to fact" and the family of πιστός assuming the concept of "faithfulness." Thus he claims, "The primary New Testament emphasis is clearly on truth as conformity to reality and opposition to lies or errors." Similarly, Louw and Nida (1987:673) list ἀληθής and ἀληθινός under the section entitled "True, False" and state that the words pertain to something that is "in accordance with historical fact – 'true, truth' as in John 4:18 τοῦτο ἀληθὲς εἴρηκας "you have told the truth." They then associate ἀλήθεια with "the content of that which is true and thus in accordance with what actually happened – 'truth' as in Mark 5:33 εἶπεν αὐτῷ πᾶσαν τὴν ἀλήθειαν "she told him the whole truth." Since it concerns empirically verifiable facts, it is said to contrast with falsehood as in Eph. 4:25 "Therefore each of you must put off falsehood (τὸ ψεῦδος) and speak truthfully [λαλεῖτε ἀλήθειαν] to his neighbor." We shall see, however, that truth as ἀληθής contrasts with more words than just ψεῦδος 'falsehood', and the semantic range of these other words suggests that perhaps we need to reconsider the range of meaning traditionally attributed to ψεῦδος.

#### 4.2.2.2 Substituting TRUTH IS AN OBJECT for TRUTH IS A ROAD

The fact that τὴν ἀλήθειαν 'the truth' functions as the direct object of the verb λέγω 'speak' suggests that Greek also has the conceptual metaphor TRUTH IS AN OBJECT.[38] The New International Version indicates that as an object *truth* can be *held* (John 8:44), *exchanged* (Rom. 1:25), and that it is also thought of as *fruit* (Eph. 5:9). Another apparent conceptual metaphor is TRUTH IS A SUBSTANCE, and as such it can be inside a person: "for there is no truth in him [the devil]" (John 8:4).

A more dominant New Testament conceptual metaphor for truth is TRUTH IS A ROAD.

> 3 John 1:4 "*walk* in the truth"
> 2 Tim. 2:18 "*wander away* from the truth
> James 5:19 "*turn away* from the truth"
> John 16:13 "the Spirit of truth…will *guide* you into all truth"
> 2 Tim 2:18-19 where Hymenaeus and Philetus are said to "have *wandered away from* the truth" with the later statement "Everyone who confesses the name of the Lord must *turn away from* wickedness."

In Acts 9:2 the Christian life is depicted as 'the Road', which is associated with righteousness (Mt 21.32) and salvation (Acts 16:17). Moreover, it was claimed to incorporate customs unlawful for Romans to accept or practice (Acts 16:21). *The Road* contrasts with the *road of legalism*, and so Paul's Jewish audience not only rejected *The Road* about which he preached, but they also slandered it publicly (Acts 19:9).

The second, very closely associated conceptual metaphor, is EXPERIENCING LIFE IS GOING ON A JOURNEY. New Testament authors most often expressed this metaphor by the verb περιπατέω 'to walk', which has been commonly glossed as 'to conduct one's life, live': Rom. 8:4 'who do not live ('walk')

---

[37] The present study on truth is a work-in-progress. Although it seems that TRUTH IS A ROAD may be the appropriate expression of the conceptual metaphor, it is also possible that the noun ἀλήθεια 'truth' is a metonym for the intransitive verb ἀληθεύω 'to truth'. As such it would stand for a *life of 'truthing'* or 'living out the truth'. This would suggest that the metaphor be phrased with an expression such as TRUTHING IS LIVING ONE'S LIFE AS CHRIST LIVED HIS or TRUTHING IS WALKING IN ACCORDANCE WITH GOD'S STANDARD. Until a broader study is completed, I will retain TRUTH IS A ROAD as the expression of this metaphor.

[38] One must check all expressions in the NIV which present the TRUTH IS AN OBJECT metaphor. Whereas Καλῶς …ἐλάλησεν in Acts 28:25 is faithfully rendered in the KJV as '*Well spake* the Holy Ghost'. The NIV translators took the liberty, however, to insert the TRUTH IS AN OBJECT metaphor, 'The Holy Spirit *spoke the truth*'. Louw and Nida (1988:I:674) note that καλῶς pertains "to being accurate and right, with a possible implication of being commendable."

according to the sinful nature but according to the Spirit' and Col. 3:7 'You used to walk in these ways, in the life you once lived.'.

Together, these two conceptual metaphors associate *truth* with *how one lives*.[39] This is expressed lexically in John 3:21 as ποιῶν τὴν ἀλήθειαν 'do the truth', in which the verb ποιῶν may be regarded as a "pro-verb", one which substitutes for a more specific verb in a way not unlike a pronoun substitutes for a more specific noun. Thus, 'do the truth' may be understood as 'live out the truth'.

There is overwhelming evidence that most, if not all, translators of the New Testament into English have unwittingly substituted the English conceptual metaphor TRUTH IS AN OBJECT for the Greek TRUTH IS A ROAD. It is important to recognize that the examples which follow are not simply cases of the nuanced meanings of isolated words. Rather, the substitution of the English conceptual metaphor for the Greek one is so consistent that it is likely the translators were unaware that they were doing so. If that is indeed the case, it testifies not only to the tacitness of the metaphor, but also to its power to structure our thoughts along certain lines rather than along others. Of many examples, I will present only a few of the most revealing.

In Eph. 4:15 Paul likely confirms what John meant by 'do the truth' when he exhorts his readers, "Instead, as we *truth* (ἀληθεύοντες) in love, we will in all things grow up into him who is the head, that is Christ." Paul's focus is on growing up into Christ (cf. Rom. 8:29 "conformed to the likeness of his son") by 'truthing', i.e., "living out the truth," not by "speaking the truth" as in most English translations. The disjunction between the Greek intransitive verb ἀληθεύω 'to truth' and the English lack of a comparable verb to express it has resulted in English translators substituting *truth* as a noun. To do so requires them to insert a transitive verb, and the default verb is *speak* because it fits well with the English TRUTH IS AN OBJECT metaphor and with the association of truth with propositions.[40] To conceive of truth as a road is simply foreign to English conceptual structure, and the lack of an intransitive verb for the concept exacerbates the problem of translating the Greek metaphor into acceptable English.[41]

This focus by Jesus and Paul on living out the Gospel calls into question the notion that the truth of the Gospel consists mainly of *what we know* rather than in *how we live*, of facts about God and Christ rather than in a way of living that reflects the character of God and Christ.

Peter also makes use of the road metaphor. In 2 Peter 2:2 Peter contrasts "those who follow shameful behavior by which means they bring the *true road* (i.e., true Christian living) into disrepute." The "true road" is rendered inadequately by the NIV as "the *way of truth*," a rendering that allows for a more abstract understanding of *truth* as opposed to *error* rather than an experiential understanding with *truth* correctly opposed to *evil* and *wickedness*. An experiential understanding focuses on their way of life, as one that should be exemplary of The Road, but one which in reality was shameful so that people ridiculed The Road.

In 2 Peter 2:15, he contrasts the "straight road" with the "wickedness" of Balaam: "They have *left* the straight road and *wandered off* to follow the *road* of Balaam son of Beor, who loved the wages of wickedness." A few verses later (21) the road that they had experienced and *turned away from* is the road of righteousness and one that is an expression of a holy commandment.

In Gal. 2:14 Paul writes of Peter and those who stopped eating with the Gentiles that they "walked not uprightly according to the truth of the gospel" (KJV) οὐκ ὀρθοποδοῦσιν πρὸς τὴν ἀλήθειαν τοῦ

[39] In some languages of Papua New Guinea the word that denotes 'truth' as an abstract concept also denotes 'fruit' as a lifestyle consistent with truth. In some languages of Pakistan, the word for 'truth' also denotes 'road' as the way to live that truth. Conceptual associations in totally unrelated languages are not likely to have been borrowed. Nor are they accidental, and any account of human conceptual processes has to provided a principled basis to explain these occurrences. The best effort so far is the philosophy of *experiential* (or *embodied*) *realism* (Lakoff 1987, Lakoff and Johnson 1999).

[40] This perspective is also reflected in the glosses for ἀληθεύω in Greek-English lexicons where the typical gloss is 'to speak, tell the truth'.

[41] A cursory survey of books in print reveals numerous titles based upon *speaking* or *telling* the truth, but only one on *living* the truth, *Living the Truth in Love: A Biblical Introduction to Moral Theology* (Ashley 1996).

εὐαγγελίου). In other words, their behavior was not a strictly proper expression of how they ought to be living out the truth of the gospel. Again, the NIV rendition depersonalizes the fact that our lives ought to be truthful by obscuring the road metaphor, "they were not acting in line with the truth of the gospel," as though truth is a list of laws to which they had to conform.

We see better now that the concepts of *straightness* and *staying on the road* are associated with *truth*. Consistent with this, John, in 1 John 4:6, contrasts τὸ πνεῦμα τῆς ἀληθείας 'the *Spirit of truth*' with τὸ πνεῦμα τῆς πλάνης 'the *spirit of straying*', thereby evoking the TRUTH IS A ROAD metaphor. The NIV translators, however, obscured the underlying Greek metaphor by substituting an abstract term, 'spirit of falsehood' for the experiential 'spirit of straying'.

The switch by the NIV translators in translating Paul's farewell address to the Ephesians (Acts 20:30) is even more striking: "Even from your own number men will arise and *distort the truth* in order to draw away disciples after them." In this passage there is no Greek word for 'truth'. The NIV translation once again renders opaque the Greek TRUTH IS A ROAD.[42] A more faithful translation would be, 'Even from among you, men will arise and speak in a way that will draw people to themselves and lead them astray." The image here is that the followers are led off the road. That Paul's warning concerns how they are to guard their conduct rather than to defend the truth is consistent with the content of his letter to the Ephesians, which contains much about how a Christian is to live out the Gospel.

The NIV translators, in translating James 5:19-20, were consistent in their rationalist approach to truth: "My brothers, if one of you should *wander from the truth* and someone should bring him back, remember this: Whoever turns a sinner from the *error of his way* will save him from death and cover over a multitude of sins." The Greek construes it metaphorically in both directions, the person who 'strays from the truth' (πλανηθῇ ἀπὸ τῆς ἀληθείας ), and someone 'turns him back' (ἐπιστρέψῃ). The NIV handles the first half correctly, but then introduces the phrase "from the error of his way" which again allows for a rationalist interpretation. The fact is that the focus is on how a person lives, not on an inference that what he did was false or erroneous.

Much of the content of the Greek conceptual metaphors TRUTH IS A ROAD and EXPERIENCING LIFE IS GOING ON A JOURNEY has been lost in the English translations. In fairness to the translators, however, it should be noted that when these translations were done, nothing was known about conceptual metaphors and the major role they have in structuring our knowledge of the world. Thus, as we have noted, translators regarded each metaphor individually as a figurative extension of what could more properly be stated literally. Thus πλανάω (along with πλάνη, πλάνης) 'to mislead, deceive, cause to be mistaken' were regarded as "figurative extensions of meaning of πλανάω 'to cause to wander off the road.'" Thus they translate Mt. 24:4 Βλέπετε μή τις ὑμᾶς πλανήσῃ with "watch out, and do not let anyone deceive you"' rather than with a translation more faithful to the metaphor, "watch out that no one leads you astray." Similarly, in 2 Tim. 3:13 they obscure the underlying Greek imagery by translating πλανῶντες καὶ πλανώμενοι with 'deceiving others and being deceived themselves' rather than with 'leading others astray and being led astray themselves', which would be reminiscent of the parable of one blind man leading another and both falling into a pit (Luke 6:39). By considering each sense to represent an autonomous figurative extension rather than as representing a part of a broader conceptual metaphor, the translators obscured the imagery behind the Greek expression. Undoubtedly, they were totally unaware that they were motivated by their own tacit, conceptual metaphor TRUTH IS AN OBJECT. The result is that the whole imagery of the Greek conceptual metaphor is compromised and no one sees the whole because the component pieces are now disassociated. More importantly, no one sees the connection between the conceptual metaphors LIVING LIFE IS GOING ON A JOURNEY and TRUTH IS A ROAD. Paul's and Peter's emphasis that the faithful are not to stray off the road, drift off course, or shipwreck their faith suggests a refinement to LIVING LIFE IS GOING ON A JOURNEY, viz., for the faithful: LIVING A LIFE OF FAITH IS REMAINING ON THE ROAD. Only by remaining on the road are the faithful able to complete their journey on the road that leads to life (Mt. 7.13).

[42] Luke could have, of course, shunned the conceptual metaphor and chosen the Greek verb δολόω 'to cause to be false, to distort' (Louw and Nida 1988:I:674).

The fact that the English translations obscured the underlying Greek conceptual metaphors make it easier for theologians to regard the biblical concept of truth as grounded in propositions. That the biblical concept of truth is grounded in conceptual metaphors as well as in propositions does not mean that the Bible has lost any of its authority. Rather, it simply means that theologians would be well advised to expand their hermeneutic base and recognize that truth may be expressed by figurative language. However, this skewing of the biblical concept of truth has led biblical interpreters and expositors to neglect the importance of truth for how we are to live and to focus instead on truth in terms of facts.

There are at least four points I would like to draw from this case study of the conceptual metaphor TRUTH IS A ROAD. The first is that Bible translators would be well advised to try to maintain SL conceptual metaphors in the languages into which they are translating. In order to do so, translators will need to translate such metaphors more literally. Furthermore, conceptual metaphors ought to be handled with as much care as are cultural models, such as the Jewish cultural model of the sacrificial system. Most translators would regard it as unthinkable that someone would take liberties to translate aspects of the sacrificial system in a way that would skew it. In order to speak against the theory of dynamic equivalence, Carson (1985) used the straw man argument that the theory could lead to some translators substituting a pig for a sheep as in John 1:29, "Look, the swine of God, who takes away the sin of the world!" In actual fact, it is extremely unlikely that anyone has seriously suggested such a breach of accepted principles of translation.

The second is that conceptual metaphors, such as that of TRUTH IS A ROAD, apparently exhibit gestalt properties. There is a sense of truth that is greater than the sum of the meanings of its constituent metaphors. The biblical data support the notion that truth is primarily experiential and concerns how a person lives. It is seen to contrast with behavior that is evil rather than with statements that are false. In McElhanon (2000a) I noted that it is wrong to deceive people by making true statements that allow for them to make incorrect inferences. People in general are prone to this behavior, largely because they can claim that it is the responsibility of the listener to draw the correct inferences. To so deceive is simply wrong, if not evil. On the other hand, there are those very rare instances when *truthing*, i.e., living out the truth, requires one to tell lies. Generally such truthing involves the preservation of justice and mercy or the furtherance of God's will. Among Old Testament examples are the midwives for the Hebrew women, Shiphrah and Puah, who were rewarded by God for having deceived Pharaoh by lying to him after he ordered them to carry out infanticide on Hebrew boys (Ex. 1:15-21) and the prophet Elisha, who deceived the Syrian soldiers of his identity (2 Kings 6:14-19).

The third is that conceptual metaphors only partially map reality. The significance of this is that all conceptual metaphors are under-utilized. Translators are well advised to use caution when they begin to elaborate upon such metaphors, for the metaphor does not belong to the translator. If a biblical writer has not made metaphorical associations, then the translator has no right to do so.

The fourth is that translators are well-advised to be alert for the potential interrelatedness of conceptual metaphors as forcefully illustrated by the Greek data where TRUTH IS A ROAD is related to LIVING A LIFE OF FAITH IS REMAINING ON THE ROAD. On the other hand, translators ought to be careful lest they make associations that are perhaps characteristic of one language but not of another, as in the case noted above where νύξ 'night' was associated with σκότος 'darkness', and then the conceptual metaphors based upon σκότος were attributed to νύξ.

## 5. Conclusion

The principled basis for a cognitive semantic approach to translation is grounded in the innate, God-given human conceptual processes, not in a need to harmonize with any given theory of linguistics. It is grounded in what it means to be human, rather than in how a linguistic theory is applied. It is grounded in conceptual processes which have been empirically verified, not in purely theoretical constructs.

Note that this approach to translation does not denigrate the contribution of morphology, grammar or discourse considerations. The difference is that cognitive semantics has implications for translation which transcend the phonological-grammatical analysis in any theoretical approach.

The fact that the integrity of scenarios ought to be maintained has implications for a theory of translation. First of all, it suggests that *the scenario is the minimal unit of translation*. It precludes a methodology that seeks for an equivalence in meaning by decomposing presumed equivalent scenarios from two languages and comparing the components as though such components were autonomous. It does not mean, however, that the scenario in the TL is construed without regard to that in the source language. What it does suggest is that once the sense of a biblical passage is grasped, then the translators identify a scenario in the TL that adequately captures that sense. They then structure the TL scenario *on the basis of its internal integrity and coherence*. The focus in this act of translation is on presenting a coherent TL scenario. It is similar to the "covert translations" which Gutt dismisses because, in his opinion, they do not preserve the sense that they are translations and therefore are incapable of achieving authenticity (Gutt 2000:215-20, 228). Nevertheless, focusing on the internal integrity and coherence of the TL scenario renders it unlikely that translators would substitute coconut-shell drinking vessels for wineskins.

This focus on the internal integrity and coherence of the TL scenario also has implications for how one may assess the fidelity of translations. My choice of *assess* over the more conventional *check* is deliberate. The latter term is consistent with a "check list" approach, one that aims to *guarantee that all of the components in the SL text are replicated in the TL text.* The cognitive semantic approach as I have presented it suggests that those who assess translations would do well to include a strong component of asking broad "content" questions relating to the overall meaning and thrust of a passage. In so doing, they are adopting an approach consistent with a focus on the internal integrity and coherence of the TL scenario. To address the topic of assessment and quality adequately, however, will have to await another day and another paper.

## References

Ashley, Benedict M. 1996. Living the Truth in Love: A Biblical Introduction to Moral Theology. Alba House.

Baker, M. 1992. In Other Words. A Coursebook on Translation. London and New York: Routledge.

Bauer, Walter. 1979. A Greek-English Lexicon of the New Testament and Other Early Christian Literature. A translation and adaptation of the fourth revised and augmented edition of Walter Bauer's Griechisch-Deutsches Wörterbuch zu den Schriften des Neuen Testaments und der übrigen urchristlichen Literature by William F. Arndt and F. Wilbur Gingrich. Second edition revised and augmented by F. Wilbur Gingrich and Frederick W. Danker from Walter Bauer's fifth edition, 1958. Chicago: University of Chicago Press.

Beekman, John and John C. Callow. 1974. Translating the Word of God. Grand Rapids, MI: Zondervan.

Bell, Roger T. 1991. Translation and Translating: Theory and Practice. London and New York: Longman.

Blackburn, Perry Louis, III. 1999. The Code Model of Communication: A Powerful Metaphor in Linguistic Metatheory. Unpublished Ph.D. dissertation, University of Texas at Arlington.

Blakemore, Diane. 1992. Understanding Utterances: an introduction to pragmatics. Oxford: Blackwell Publishers.

Callow, Kathleen. 1998. Man and Message: A Guide to Meaning-Based Text Analysis. Lanham, NY and Oxford: Summer Institute of Linguistics and University Press of America.

Carson, D. A. 1985. "The Limits of Dynamic Equivalence in Bible Translation." Evangelical Review of Theology 9(3):200-13. (Reprinted in Notes on Translation No. 121 (October, 1987):1-15.

———. 1991. The Gospel According to John. Pillar New Testament Commentary Series. Grand Rapids, MI: Eerdmans.

Cervel, M. Sandra Peña. 2003. Topology and Cognition: What Image-schemas reveal about the metaphorical language of emotions. Muenchen: Lincom Europa.

Chafe, Wallace L. 1970. Meaning and the Structure of Language. Chicago: University of Chicago Press.

Chesterman, A., ed. 1989. Readings in Translation Theory. Helsinki: Oy Finn Lectura Ab.

Chomsky, Noam. 1957. Syntactic Structures. The Hague: Mouton.

Clinton, William J. 2000. "Remarks in a discussion at the Minister's Leadership Conference in South Barrington, Illinois." In Weekly Compilation of Presidential Documents 1832. Superintendent of Documents Aug. 14, 2000 and Bell & Howell Information and Learning Company. http://ptg.djnr.com/ccroot/asp/publib/story.asp

Crystal, David. 1965. Linguistics, Language and Religion. New York: Hawthorn Books.

de Waard, Jan and Eugene A. Nida. 1986. From One Language to Another: Functional Equivalence in Bible Translating. Nashville: Thomas Nelson.

Gentzler, Edwin. 1993. Contemporary Translation Theories. London and New York: Routledge

Gibbs, R. 1994. The Poetics of Mind: Figurative Thought, Language, and Understanding. New York: Cambridge University Press.

———. 1999. "Taking Metaphor out of Our Heads and Putting It into the Cultural World." In Metaphor in Cognitive Linguistics. Raymond W. Gibbs, Jr. and Gerard J. Steen, eds. Amsterdam and Philadelphia: John Benjamins Publishing Company. Pp. 145-66.

———, L. Strom, and M. Spivey-Knowlton. 1997. "Conceptual Metaphors in Mental Imagery for Proverbs." Journal of Mental Imagery 21:83-110.

Gutknecht, Christoph and Lutz J. Rölle. 1996. Translating by Factors. Albany: State University of New York Press.

Gutt, Ernst-August. 1991. Translation and Relevance. Cognition and Context. Oxford and Cambridge, MA: Basil Blackwell.

———. 1992. Relevance Theory: A Guide to Successful Communication in Translation. Dallas, TX: Summer Institute of Linguistics and New York: United Bible Societies.

———. 2000. Translation and Relevance: Cognition and Context. 2nd edition. Manchester and Boston: St. Jerome Publishing.

Hewson, Lance and Jacky Martin. 1991. Redefining Translation. The Variational Approach. London and New York: Routledge.

Johnson, Mark. 1990. The Body in the Mind: The Bodily Basis of Meaning, Imagination, and Reason. Chicago: University of Chicago Press.

Kearney, Michael. 1984. World View. Novato, CA: Chandler and Sharp.

Kuhn, Thomas S. 1970. The Structure of Scientific Revolutions. 2nd ed. Chicago: University of Chicago Press. (Originally published in 1962: 2nd enlarged edition published in 1970, 3rd edition in 1996).

———. 1994. "Paradigms of Scientific Evolution." In The American Philosopher: Conversations with Quine, Davidson, Putnam, Nozick, Danto, Rorty, Cavell, MacIntyre, and Kuhn. Giovanna Borradori, ed. Trans. Rosanna Crocitto. Chicago: University of Chicago Press. pp. 153-67.

Lakoff, George. 1987. Women, Fire, and Dangerous Things. Chicago, IL: University of Chicago Press.

———, and Mark Johnson. 1980. Metaphors We Live By. Chicago: University of Chicago Press.

———, and Mark Johnson. 1999. Philosophy in the Flesh. Chicago: University of Chicago Press.

Langacker, R. 1986, 1991. Foundations of Cognitive Grammar. 2 vols. Stanford: Stanford University Press.

———. 1990. Concept, Image, and Symbol: The Cognitive Basis of Grammar. Berlin and New York: Mouton de Gruyter.

Larson, Mildred L. 1984. Meaning-based Translation: A Guide to Cross-Language Equivalence. Lanham, MD: University Press of America.

———. 1998. Meaning-Based Translation: A Guide to Cross-Language Equivalence. 2nd edition. Lanham, NY and Oxford: University Press of America.

Lefevere, André and Susan Bassnett. 1995. "Introduction: Proust's Grandmother and the Thousand and One Nights: The 'Cultural Turn' in Translation Studies." In Translation, History and Culture. Paperback edition. Susan Bassnett and André Lefevere, eds. Cassell. pp.1-13.

Louw, Johannes P. and Eugene A. Nida, eds. 1988. Greek-English Lexicon of the New Testament Based on Semantic Domains. 2 vols. New York, NY: United Bible Societies.

McElhanon, Kenneth A. 2000a. "Mired in the Basic Level: the Quagmire of Cultural Relativism." Paper presented to a symposium on Christian Perspectives on Anthropological Theory, Biola University – School of Intercultural Studies, La Mirada, CA. 6-8 April, 2000.

———. 2000b. "Rationalizing the Gospel Truth: Contextualization or Syncretism." Paper presented to the 52nd Annual Meeting of the Evangelical Theological Society held at Opryland, Nashville, TN, 15-17 November, 2000.

———. 2002. "From Word to Scenario: the influence of linguistic theories upon models of translation." Bible Translation 2001 Conference: International Conference on Bible Translation and Practice. 45 pp. Published electronically on a CDROM in Acrobat PDF format. Dallas, TX: SIL International.

Neubert, Albrecht. 1986. "Translatorische Relativität." In Übersetzungswissenschaft—eine Neuorientierung. M. Snell-Hornby, ed. Tübingen: Francke. pp. 85-105.

———. 1989. "Translation, Interpreting and Text Linguistics." In A. Chesterman, pp. 141-56.

——— and Gregory M. Shreve. 1992. Translation as Text. Kent, Ohio and London: The Kent State University Press.

Newmark, Peter. 1981. Approaches to Translation. Oxford: Pergamon Press.

———. 1985. "The Translation of Metaphor." In The Ubiquity of Metaphor: Metaphor in Language and Thought. Wolf Paprotté and René Dirven, eds. Amsterdam and Philadelphia: John Benjamins Publishing Company. pp. 295-326.

———. 1988. A Textbook of Translation. New York: Prentice Hall.

———. 1991. About Translation. Multilingual Matters 74. Clevedon, Philadelphia, Adelaide: Multilingual Matters Ltd.

Nicole, Roger. 1983. "The Biblical Concept of Truth." In Scripture and Truth. D.A. Carson and John D, Woodbridge, eds. Grand Rapids, MI: Zondervan. Pp. 287-298.

Nida, Eugene A. 1971. "Semantic Components in Translation Theory." In Applications of Linguistics. Selected Papers of the Second International Congress of Applied Linguistics, Cambridge 1969. Cambridge: University Press. (reprinted in Nida (1975).

———. 1975. Exploring Semantic Structures. München: Wilhelm Fink Verlag.

———, and Charles R. Taber. 1969. The Theory and Practice of Translation. Leiden: Brill.

Ponterotto, Diane. 2000. "The Cohesive Role of Cognitive Metapyhor in Discourse and Conversation." In Metaphor and Metonymy at the Crossroads: A Cognitive Perspective. Antonio Barcelona, ed. Berlin and New York: Mouton de Gruyter.

Quine, Willard Van Orman. 1960. Word and Object. Cambridge, MA: The Technology Press of the Massachusetts Institute of Technology and New York and London: John Wiley & Sons.

———. 1969. Ontological Relativity and Other Essays. New York and London: Columbia University Press.

———. 1992. Pursuit of Truth. Rev. ed. Cambridge, MA and London: Harvard University Press.

Random House Webster's College Dictionary. New York: Random House. 1992.

Reddy, M. J. 1979. "The Conduit Metaphor—a Case of Frame Conflict in Our Language about Language." In Metaphor and Thought. Andrew Ortony, ed. Cambridge, MA: Cambridge University Press. Pp. 284-324.

Reiss, Katharina. 1971. Möglichkeiten und Grenzen der Übersetzungskritik. Munich: Max Hueber Verlag.

———. 1989. "Text Types, Translation Types and Translation Assessment." In Chesterman, pp. 105-15.

Rosch, Eleanor. 1978. "Principles of Categorization." In Cognition and Categorization. Eleanor Rosch and Barbara B. Lloyd, eds. New York: John Wiley. pp. 27-48.

———, Carolyn B. Mervis, Wayne D. Gray, David M. Johnson, and Penny Boyes-Braem. 1976. "Basic Objects in Natural Categories." Cognitive Psychology 8:382-439.

Saussure, Ferdinand de. 1972 [1916]. Cours in linguistique générale. 4th ed. Paris: Payot.

Schank, Roger C. and Robert P. Abelson. 1977. Scripts, Plans, Goals and Understanding: An Inquiry into Human Knowledge Structures. Hillsdale, NJ: Lawrence Erlbaum Associates, Publ

Schreiber, M. 1993. Übersetzung und Bearbeitung. Zur Differenzierung und Abgrenzung des Übersetzungsbegriffs. Tübinger Beiträge zur Linguistik 389. Tübingen: Gunter Narr.

Shannon, Claude E. 1948. "A Mathematical Theory of Communication." Bell System Technical Journal 27(3):379-423; 27(4):623-56.

Shaw, R. Daniel. 1988. Transculturation: The Cultural Factor in Translation and Other Communication Tasks. Pasadena, CA: William Carey Library.

Snell-Hornby, Mary. 1988. Translation Studies: In Integrated Approach. Philadelphia and Amsterdam: Benjamins.

———. 1995. Translation Studies: An Integrated Approach. Rev. ed. Philadelphia and Amsterdam: John Benjamins.

Sperber, Dan and Deirdre Wilson. 1986. Relevance: Communication and Cognition. Oxford: Blackwell.

Tanaka, James W., and Marjorie Taylor. 1991. "Object Categories and Expertise: Is the Basic Level in the Eye of the Beholder?" Cognitive Psychology 23:457-482.

Tomlin, Russell S., Linda Forrest, Ming Ming Pu and Myung Hee Kim. "Discourse Semantics." In Discourse as Structure and Process. Ed. Teun A. van Dijk. London: Thousand Oaks and New Delhi: Sage.

Vine, W. E. 1981. Vine's Expository Dictionary of Old and New Testament Words. (Old Testament edited by F. F. Bruce). Old Tappan, NJ: Fleming H. Revell Company.

Wilss, Wolfram. 1982. The Science of Translation: Problems and Methods. trans. Wolfram Wilss. Tübingen: Gunter Narr.